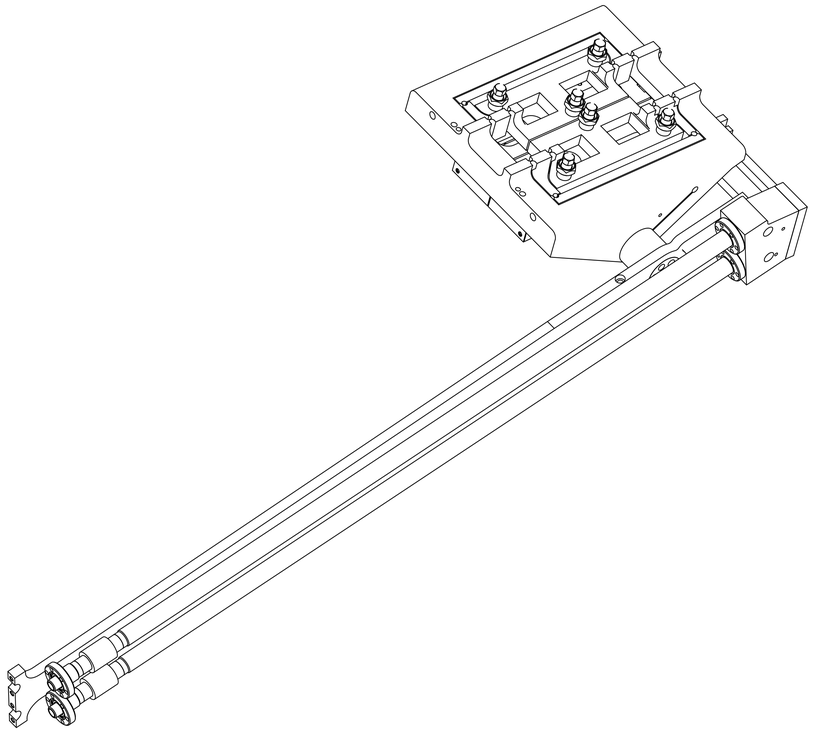

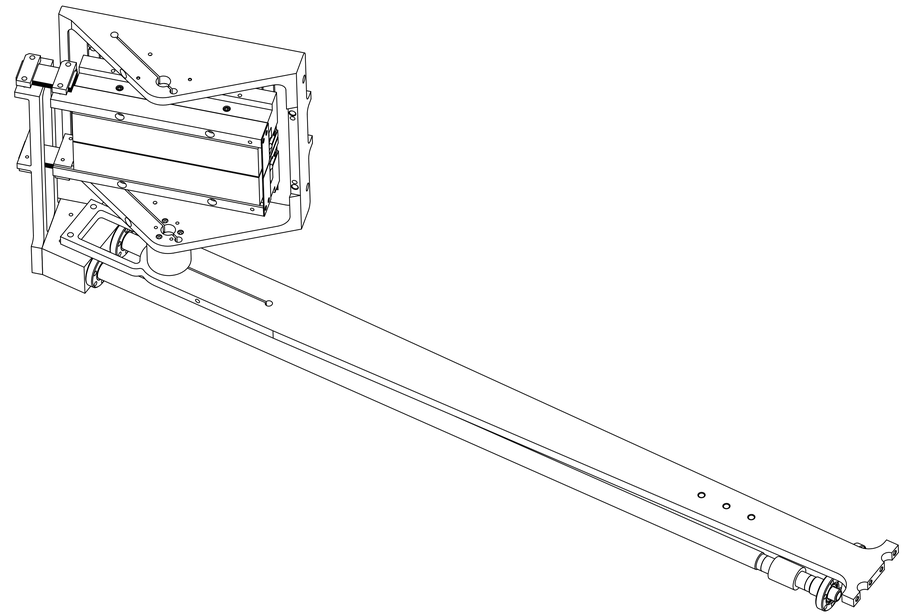

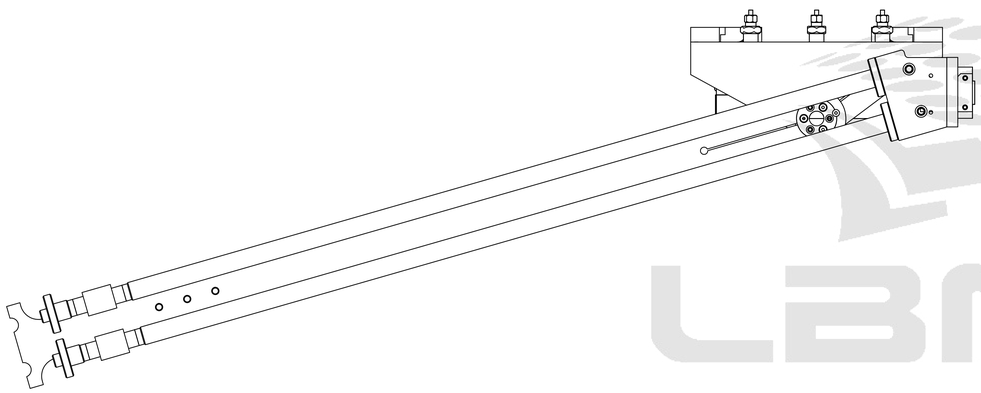

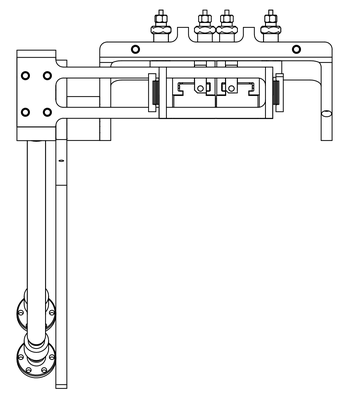

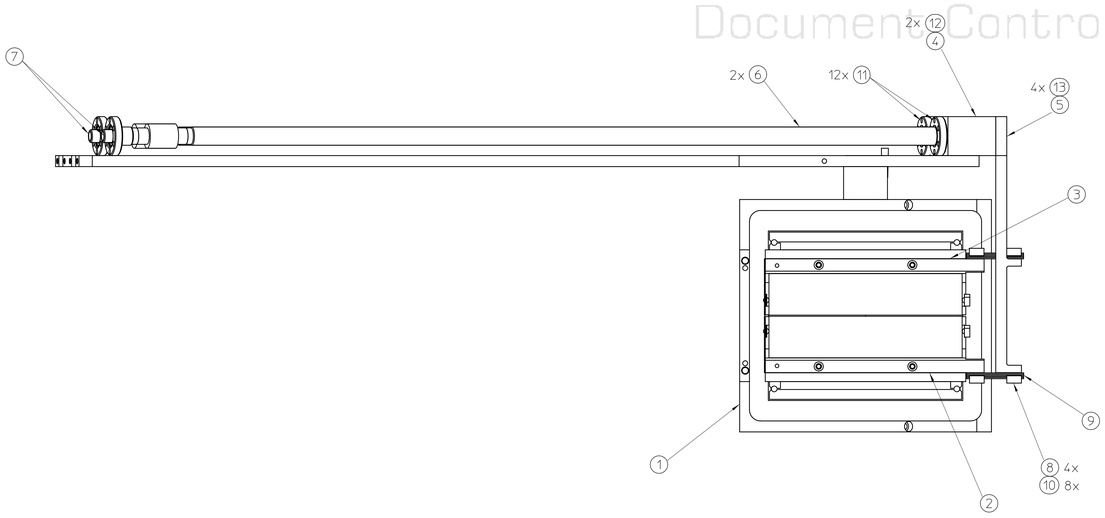

UNLESS OTHERWISE SPECIFIED,

1) DIMENSIONS AND TOLERANCING PER ASME Y14.5M-1994. ALL DIMENSIONS ARE IN INCHES. REFERENCE DIMENSIONS ARE SHOWN IN PARENTHESES. NOT ALL HIDDEN LINES ARE SHOWN.

2) THIS IS AN ULTRA HIGH VACUUM (UHV) ASSY AND REQUIRES SPECIAL ATTENTION TO AVOID UHV CONTAMINATION. READ LBNL SPECIFICATION M20013 BEFORE PERFORMING ANY FABRICATION OR ASSEMBLY.

3) PROTECT FINISHED ASSY BY BAGGING OR SIMILAR METHOD TO PROTECT AND MAINTAIN CLEANLINESS DURING SHIPMENT AND STORAGE. TAKE EXTREME CARE NOT TO DING, SCRATCH, DENT, OR OTHERWISE MARK ANY MACHINED SURFACE.

REQD	ITEM	PART NO.	DESCRIPTION
	14		
4	13		SOC.HD.CAP SCREW #1/4-20, UNC x .75 LG. SST. SILVER PLATED
2	12		SOC.HD.CAP SCREW #1/4-20, UNC x 1.75 LG. SST. SILVER PLATED
12	11		SOC.HD.CAP SCREW #8-32, UNC x .50 LG. SST. SILVER PLATED
8	10		SOC.HD.CAP SCREW #6-32, UNC x .62 LG. SST. SILVER PLATED
10	9		COPPER COOLING BRAID (CUT TO SUIT)
4	8	26B337	GRATING COOLING BRAID CLAMP
2	7	26B236	GRATING COOLANT TUBE
2	6	26B238	GRATING AIR GUARD TUBE WELDMENT
1	5	26B336	COOLING TRANSFER LINK BAR
1	4	26B202	MONO GRATING MASK COOLING BLOCK
1	3	26B344	GRATING SUBASSY LEFT
1	2	26B345	GRATING SUBASSY RIGHT
1	1	26B358	GRATING CRADLE PIVOT MATCH TAPER REAM ASSY

REV	AUTHOR	APPROVER	DATE	CHANGE DESCRIPTION
A	patton	patton	06-30-20	INITIAL REVISION

UNLESS OTHERWISE SPECIFIED
TOLERANCES: X± .- XX± .-- .XXX± .---
FRACTIONS: ± -/--
ANGLES: ± - .-°/INCH
MACH. SURFS.: 125√ OR BETTER
REF: ASME Y14.5M-1994, THREADS ARE CLASS 2
BREAK EDGES .016 MAX. ON MACHINED WORK
REMOVE BURRS, WELD SPLATTER & LOOSE SCALE

PROJECT NAME:
PROJECT NUMBER:
DO NOT SCALE PRINT
CATEGORY CODE: AL 4165
SCALE: 1 : 2
THIRD ANGLE PROJECTION

ERNEST ORLANDO LAWRENCE
BERKELEY NATIONAL LABORATORY
UNIVERSITY OF CALIFORNIA

ALS - INSERTION DEVICE BEAMLINES
BL 6.0.1.2 BRANCHLINE
GRATING CRADLE SUB ASSEMBLY

SHEET 1 OF 1 | SIZE: E | DWG NO: 26B346 | REV: A

LBNL
Document Control Center

Officially Released to the LBNL Document Control Center
Released: June 30th, 2004 DCC Auth Key: M7NO9Z16PT
Downloaded by: Sukhon Panomchan at July 29, 2004 11:08:23

AUTO GENERATED PDF
Jun 30 2004 14:41:43 PDT