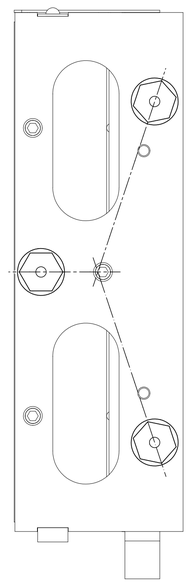

MOUNTING FOOT SLOT AXIS ORIENTATION DETAIL

MOUNTING FOOT IS SHOWN IN THIS VIEW
WITH THE OTHER PARTS OF THE ADJUSTER
ASSEMBLYS REMOVED FOR CLARITY

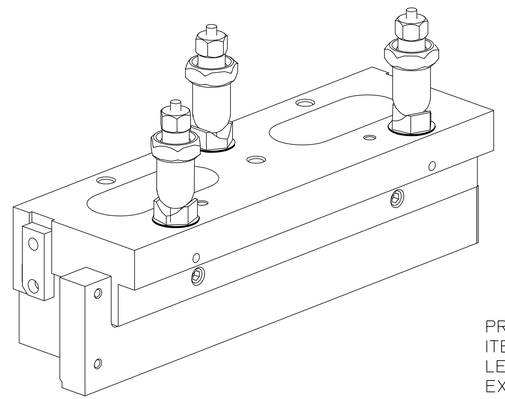

ISOMETRIC VIEW

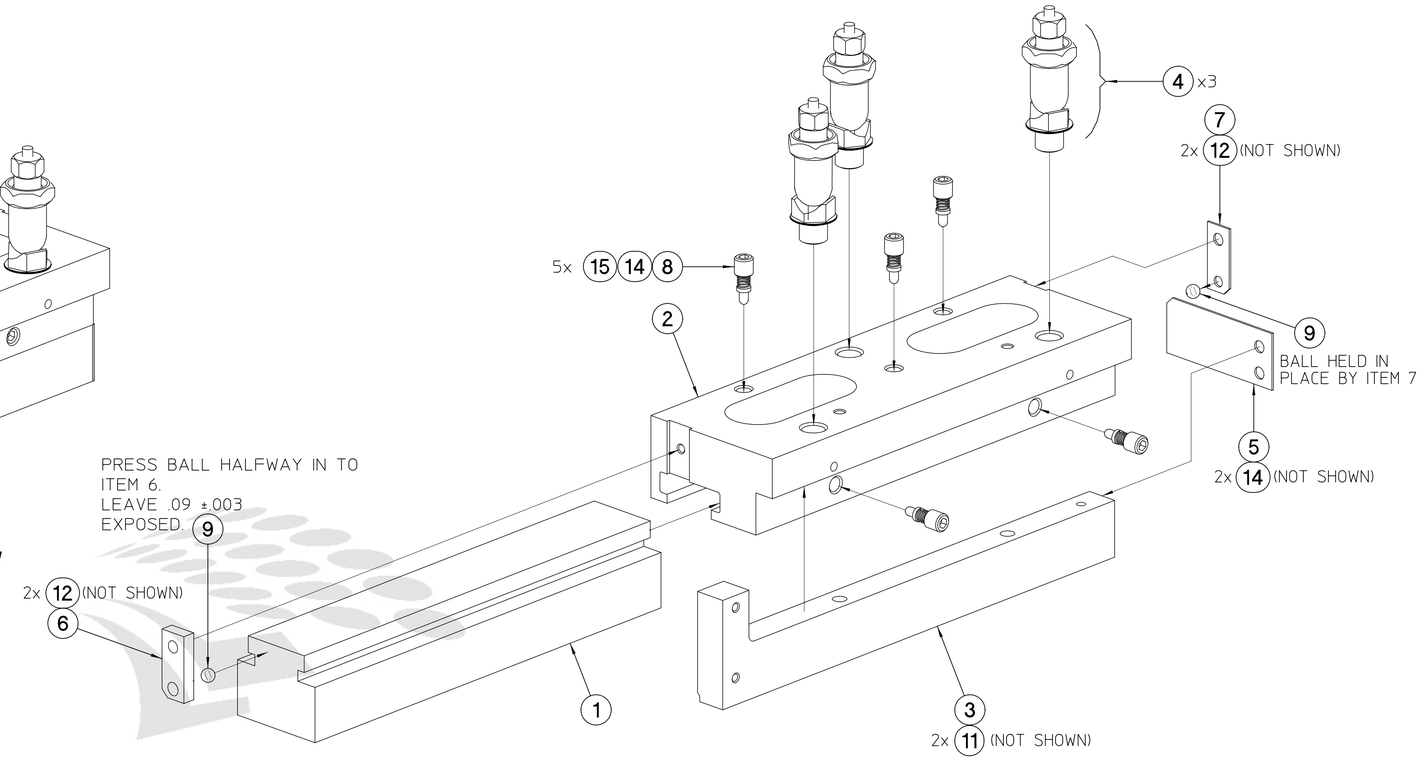

EXPLODED VIEW

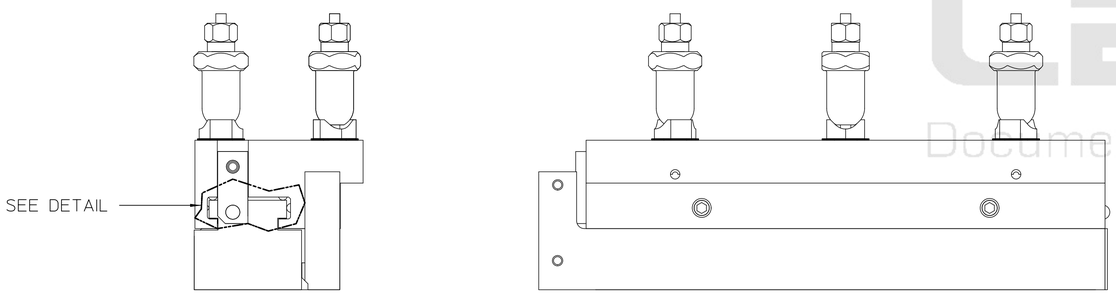

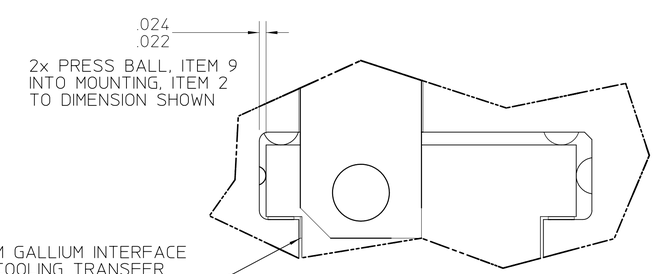

DETAIL
SCALE: 4/1

UNLESS OTHERWISE SPECIFIED,

1) DIMENSIONS AND TOLERANCING PER ASME Y14.5M-1994. ALL DIMENSIONS ARE IN INCHES. REFERENCE DIMENSIONS ARE SHOWN IN PARENTHESES. NOT ALL HIDDEN LINES ARE SHOWN.

2) THIS IS AN ULTRA HIGH VACUUM (UHV) PART AND REQUIRES SPECIAL ATTENTION TO AVOID UHV CONTAMINATION. READ LBNL SPECIFICATION M773 BEFORE PERFORMING ANY FABRICATION.

3) PROTECT FINISHED PART BY BAGGING OR SIMILAR METHOD TO PROTECT AND MAINTAIN CLEANLINESS DURING SHIPMENT AND STORAGE. TAKE EXTREME CARE NOT TO DING, SCRATCH, DENT, OR OTHERWISE MARK ANY MACHINED SURFACE.

REQD	ITEM	PART NO.	DESCRIPTION
5	15		COIL SPRING, Ø.188 X Ø.016 X .310 HIGH, SST, ASSOCIATED SPRING #C0180-016-310S OR EQUIVALENT
1	14		SCKT HD SET SCREW, SST, 1/4-20 UNC X .25, SILVER PLATED
3	13		SCKT HD SET SCREW, SST, 2-56 UNC X .19, SILVER PLATED
4	12		SCKT HD CAP SCREW, SST, 6-32 UNC X .38, SILVER PLATED
2	11		SCKT HD CAP SCREW, SST, 8-32 UNC X 1.0, SILVER PLATED
2	10		BALL BEARING, .0625
2	9		BALL BEARING, .1875
5	8	26B333	MIRROR CLAMP PLUNGER
1	7	26B341	BALL SPRING RETAINER
1	6	26B342	BALL STOP RETAINER
1	5	26B340	GRATING MASK
3	4	26A963	GRATING MOUNTING ADJUSTER ASSEMBLY
1	3	26B339	GRATING COOLING SIDE PLATE, RIGHT
1	2	26B343	GRATING MOUNTING PLATE, RIGHT
1	1	26B347	GRATING SUBSTRATE, 10° FACE

REV	AUTHOR	APPROVER	DATE	CHANGE DESCRIPTION
C	wingert			
A	knolls	patton	06-30-20	INITIAL REVISION

UNLESS OTHERWISE SPECIFIED
TOLERANCES: .X± .- .XX± .-- .XXX± .---
FRACTIONS: ± -/--
ANGLES: ± -.-°/INCH
MACH. SURFS.: 125√ OR BETTER
REF: ASME Y14.5M-1994, THREADS ARE CLASS 2
BREAK EDGES .016 MAX. ON MACHINED WORK
REMOVE BURRS, WELD SPLATTER & LOOSE SCALE

PROJECT NAME: Advanced Light Source
UNIQUE NUMBER: AL-0007-4974
DO NOT SCALE PRINT — SCALE: 1:1 — CATEGORY CODE: AL 4165
THIRD ANGLE PROJECTION

ERNEST ORLANDO LAWRENCE
BERKELEY NATIONAL LABORATORY
UNIVERSITY OF CALIFORNIA

ALS - INSERTION DEVICE BEAMLINES
BL 6.0.1.2 BRANCHLINE
GRATING, SUBSTRATE ASSEMBLY, RIGHT

SHEET 1 OF 1 — SIZE: D — DWG NO: 26B345 — REV C

AUTO GENERATED PDF
Jul 29 2004 09:31:38 PDT

LBNL Document Control Center

Officially Released to the LBNL Document Control Center
Released: July 29th, 2004 DCC Auth Key: Q0N5RB21XC

Downloaded by: Sukhon Panomchan at July 29, 2004 11:22:38