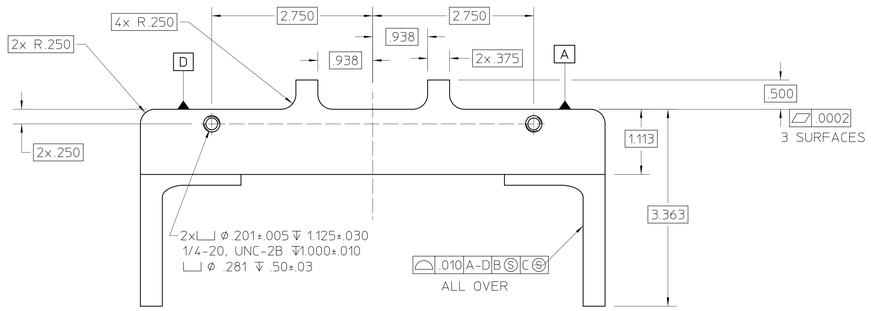

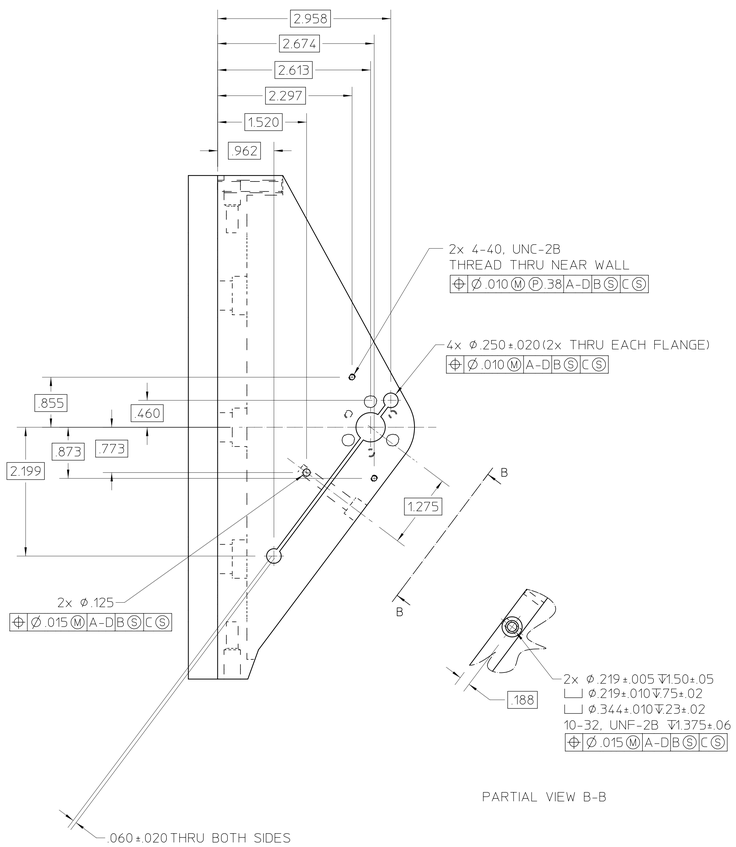

PARTIAL VIEW B-B

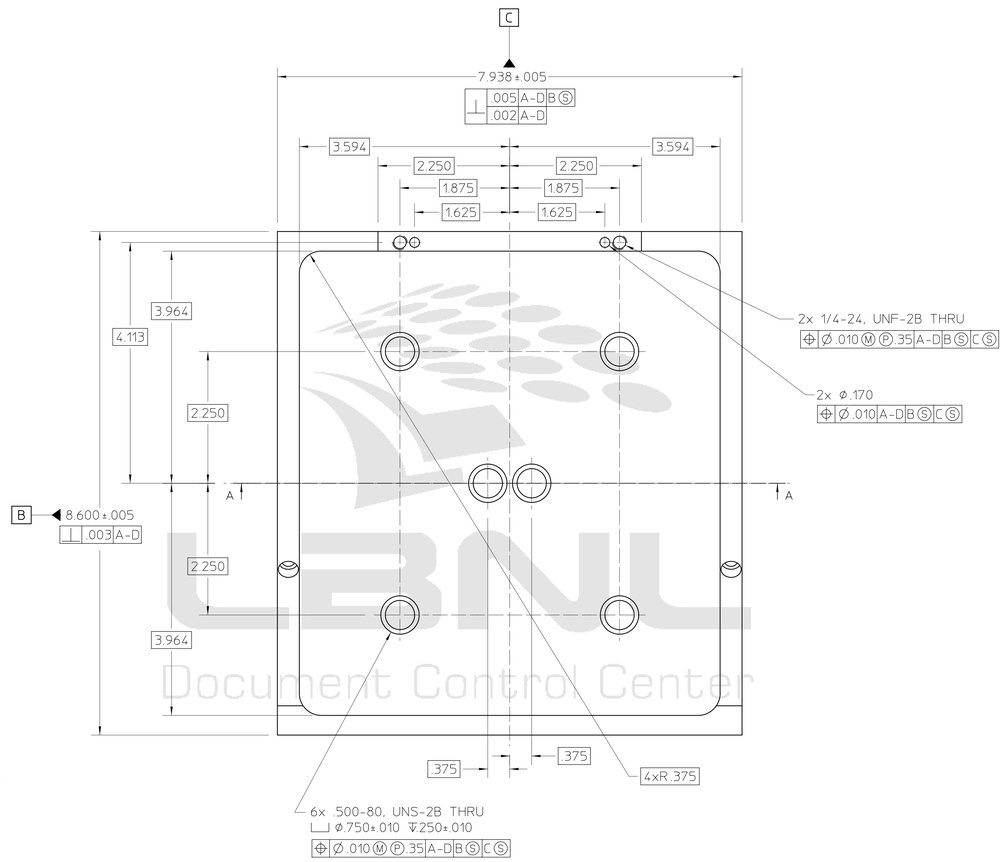

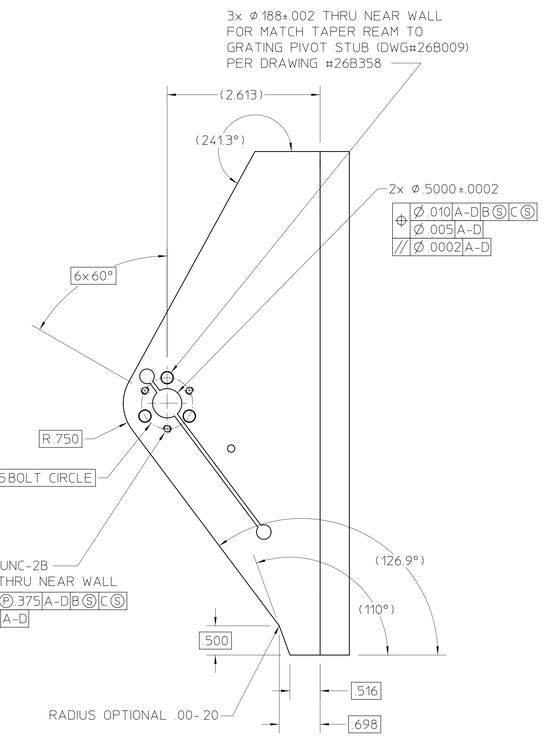

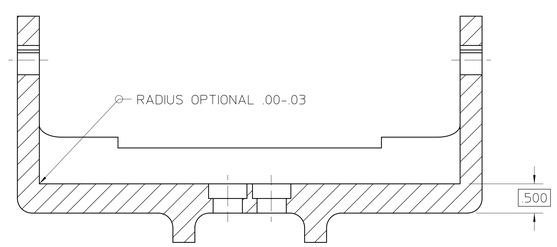

SECTION A-A

1) DIMENSIONS AND TOLERANCING PER ASME Y14.5M-1994. ALL DIMENSIONS ARE IN INCHES. REFERENCE DIMENSIONS ARE SHOWN IN PARENTHESES. NOT ALL HIDDEN LINES ARE SHOWN.

2) THIS IS AN ULTRA HIGH VACUUM (UHV) PART AND REQUIRES SPECIAL ATTENTION TO AVOID UHV CONTAMINATION. READ LBNL SPECIFICATION M20013 BEFORE PERFORMING ANY FABRICATION.

3) PROTECT FINISHED PART BY BAGGING OR SIMILAR METHOD TO PROTECT AND MAINTAIN CLEANLINESS DURING SHIPMENT AND STORAGE. TAKE EXTREME CARE NOT TO DING, SCRATCH, DENT, OR OTHERWISE MARK ANY MACHINED SURFACE.

MACHINING DETAILS

SEE SHEET 2 FOR EDM DETAILS

REV	AUTHOR	APPROVER	DATE	CHANGE DESCRIPTION
A	patton	patton	06-30-20	INITIAL REVISION

MAT 2: . | NOTES:
MAT 1: , STAINLESS STEEL 304 | NOTES: UHV CLEAN

UNLESS OTHERWISE SPECIFIED
TOLERANCES: X± .- .XX± .-- .XXX± .---
FRACTIONS: ± -/--
ANGLES: ± - -°/INCH
MACH. SURFS.: 125√ OR BETTER
REF: ASME Y14.5M-1994, THREADS ARE CLASS 2
BREAK EDGES .016 MAX. ON MACHINED WORK
REMOVE BURRS, WELD SPLATTER & LOOSE SCALE

PROJECT NAME:
PROJECT NUMBER:
DO NOT SCALE PRINT
SCALE: 1 : 1
CATEGORY CODE: AL 4165
THIRD ANGLE PROJECTION

ERNEST ORLANDO LAWRENCE
BERKELEY NATIONAL LABORATORY
UNIVERSITY OF CALIFORNIA
ALS - INSERTION DEVICE BEAMLINES
BL 6.0.1.2 BRANCHLINE
FEMTO MONO GRATING CRADLE

SHEET 1 OF 2 | SIZE: E | DWG NO: 26B240 | REV: A

Officially Released to the LBNL Document Control Center
Released: June 30th, 2004 DCC Auth Key: HUDDF0TEWY
Downloaded by: Sukhon Panomchan at July 29, 2004 11:25:33
AUTO GENERATED PDF
Jun 30 2004 15:21:44 PDT

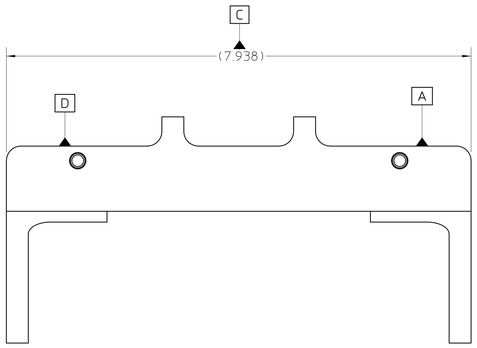

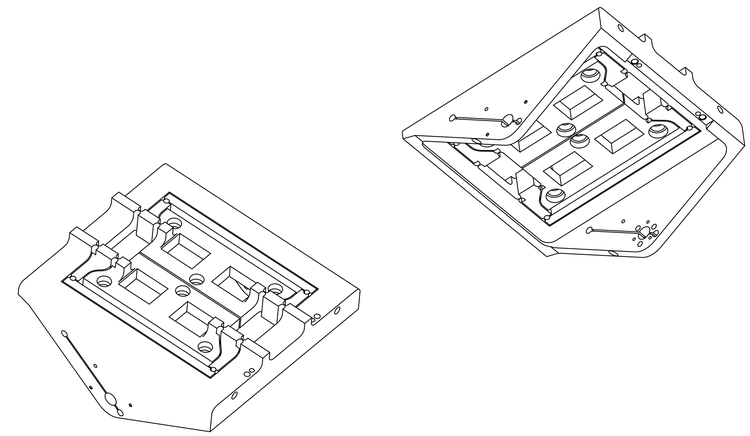

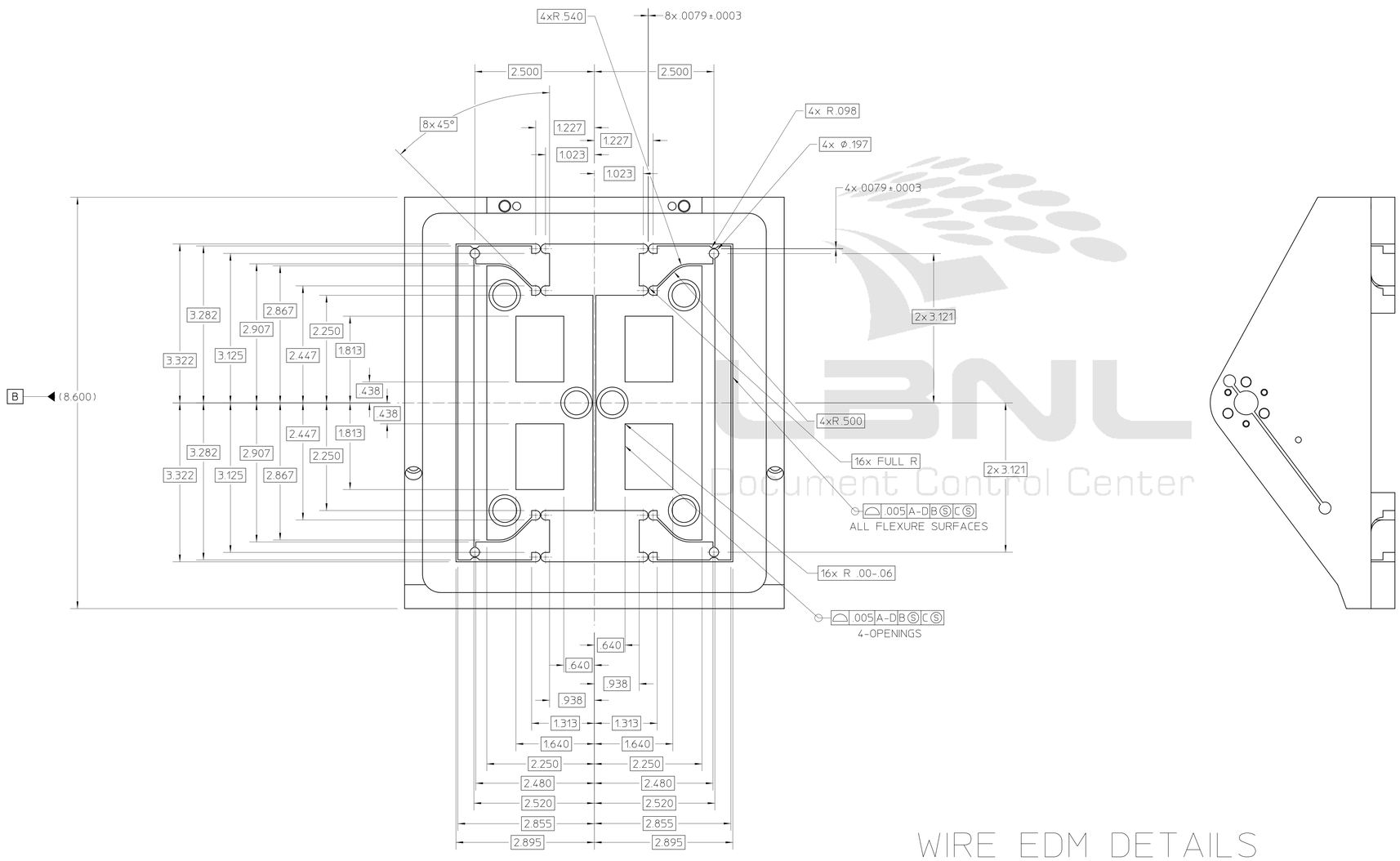

WIRE EDM DETAILS

1) DIMENSIONS AND TOLERANCING PER ASME Y14.5M-1994. ALL DIMENSIONS ARE IN INCHES. REFERENCE DIMENSIONS ARE SHOWN IN PARENTHESES. NOT ALL HIDDEN LINES ARE SHOWN.

2) THIS IS AN ULTRA HIGH VACUUM (UHV) PART AND REQUIRES SPECIAL ATTENTION TO AVOID UHV CONTAMINATION. READ LBNL SPECIFICATION M20013 BEFORE PERFORMING ANY FABRICATION.

3) PROTECT FINISHED PART BY BAGGING OR SIMILAR METHOD TO PROTECT AND MAINTAIN CLEANLINESS DURING SHIPMENT AND STORAGE. TAKE EXTREME CARE NOT TO DING, SCRATCH, DENT, OR OTHERWISE MARK ANY MACHINED SURFACE.

REV	AUTHOR	APPROVER	DATE	CHANGE DESCRIPTION
A	patton	patton	06-30-20	INITIAL REVISION

MAT 2: . | NOTES:
MAT 1: , STAINLESS STEEL 304 | NOTES: UHV CLEAN

UNLESS OTHERWISE SPECIFIED
TOLERANCES: .X± .- XX± .-- .XXX± .---
FRACTIONS: ± -/--
ANGLES: ± -.-°/INCH
MACH. SURFS.: 125√ OR BETTER
REF ASME Y14.5M-1994, THREADS ARE CLASS 2
BREAK EDGES .016 MAX. ON MACHINED WORK
REMOVE BURRS, WELD SPLATTER & LOOSE SCALE

PROJECT NAME:
PROJECT NUMBER:

ERNEST ORLANDO LAWRENCE
BERKELEY NATIONAL LABORATORY
UNIVERSITY OF CALIFORNIA

ALS - INSERTION DEVICE BEAMLINES
BL 6.0.1.2 BRANCHLINE
FEMTO MONO GRATING CRADLE

DO NOT SCALE PRINT | CATEGORY CODE: AL 4165
SCALE: 1 : 1
THIRD ANGLE PROJECTION
SHEET 2 OF 2 | SIZE: E | DWG NO: 26B240 | REV A

AUTO GENERATED PDF
Jun 30 2004 15:21:50 PDT

Officially Released to the LBNL Document Control Center
Released: June 30th, 2004 DCC Auth Key: HUDDF0TEWY
Downloaded by: Sukhon Panomchan at July 29, 2004 11:25:33