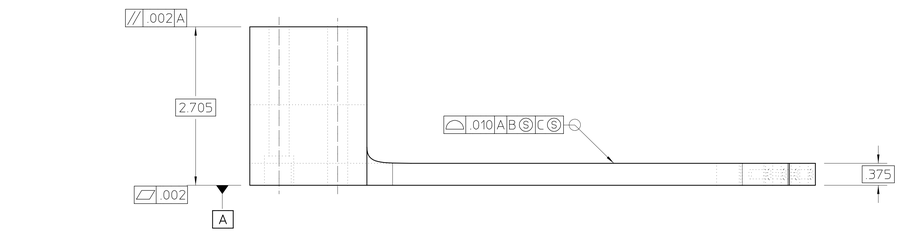

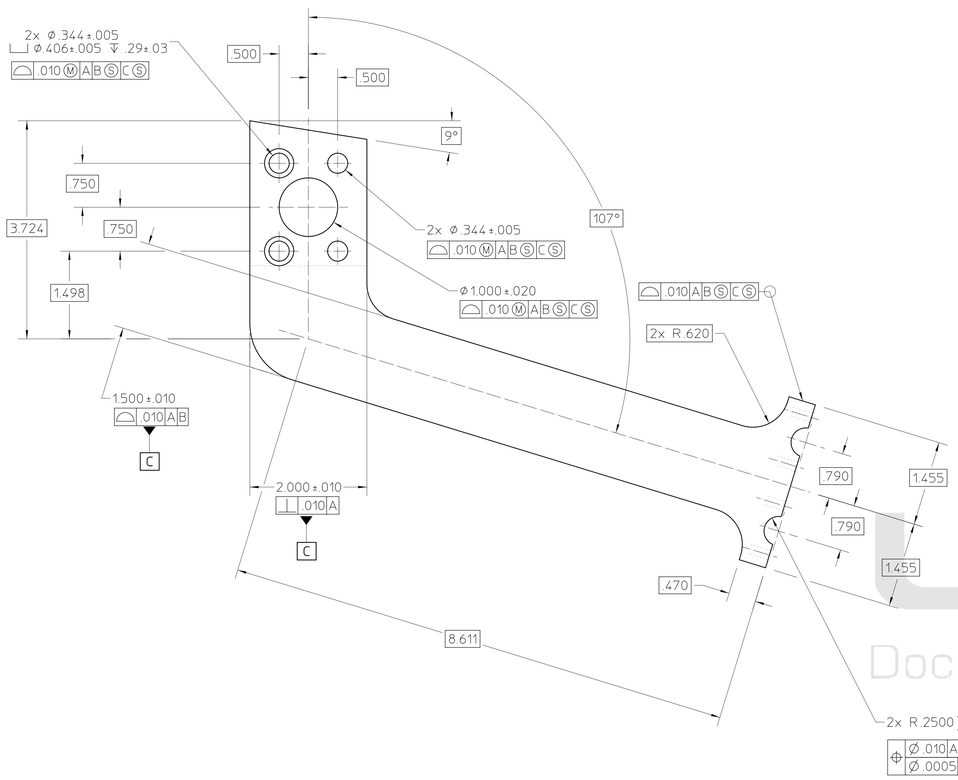

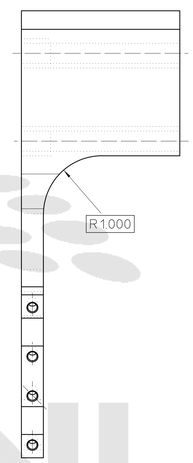

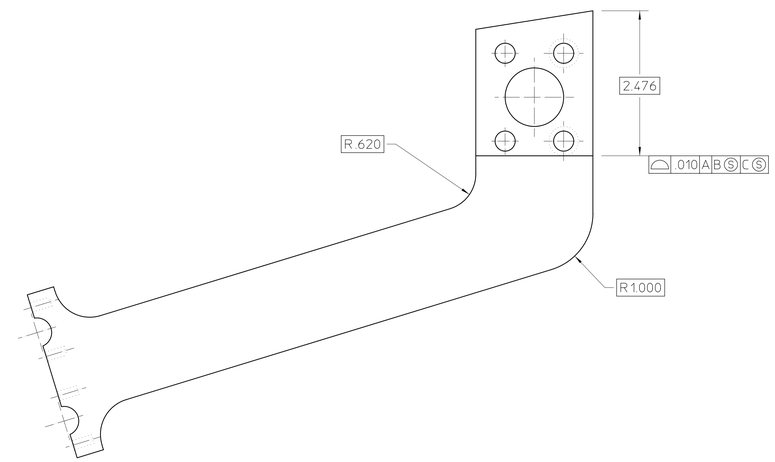

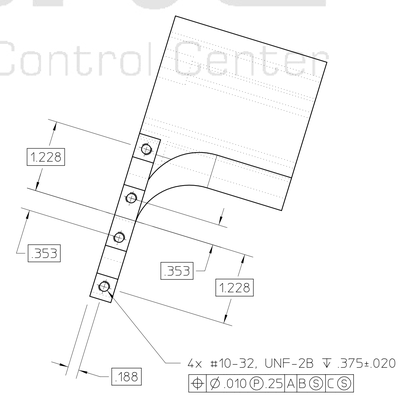

VIEW A-A

UNLESS OTHERWISE SPECIFIED,

1. DIMENSIONS AND TOLERANCING PER ASME Y14.5M-1994. ALL DIMENSIONS ARE IN INCHES. REFERENCE DIMENSIONS ARE SHOWN IN PARENTHESES. NOT ALL HIDDEN LINES ARE SHOWN.

2. THIS IS AN ULTRA HIGH VACUUM (UHV) ASSY AND REQUIRES SPECIAL ATTENTION TO AVOID UHV CONTAMINATION. READ LBNL SPECIFICATION M20013 BEFORE PERFORMING ANY FABRICATION OR ASSEMBLY.

3. PROTECT FINISHED PART BY BAGGING OR SIMILAR METHOD TO PROTECT AND MAINTAIN CLEANLINESS DURING SHIPMENT AND STORAGE. TAKE EXTREME CARE NOT TO DING, SCRATCH, DENT, OR OTHERWISE MARK ANY MACHINED SURFACE.

REV	AUTHOR	APPROVER	DATE	CHANGE DESCRIPTION
B	knolls			simplified per r. patton
A	knolls	patton	01-30-20	INITIAL REVISION

UNLESS OTHERWISE SPECIFIED
TOLERANCES: .X± -- .XX± -- .XXX± --- ; FRACTIONS: ± -/-- ; ANGLES: ± -.-°/INCH ; MACH. SURFS.: 125√ OR BETTER
REF: ASME Y14.5M-1994; THREADS ARE CLASS 2
BREAK EDGES .016 MAX. ON MACHINED WORK
REMOVE BURRS, WELD SPLATTER & LOOSE SCALE

MAT 2: . NOTES:
MAT 1: . STAINLESS STEEL 304 NOTES:

PROJECT NAME: Advanced Light Source
UNIQUE NUMBER: AL-0007-5083
DO NOT SCALE PRINT SCALE: 1 : 1 CATEGORY CODE: AL 4165
THIRD ANGLE PROJECTION

ERNEST ORLANDO LAWRENCE BERKELEY NATIONAL LABORATORY
UNIVERSITY OF CALIFORNIA
ALS - INSERTION DEVICE BEAMLINES
BL 6.0.1.2 BRANCHLINE
MIRROR CRADLE SINEBAR

SHEET 1 OF 1 | SIZE: E | DWG NO: 26B209 | REV B

LBNL Document Control Center
Officially Released to the LBNL Document Control Center
Released: June 30th, 2004 DCC Auth Key: 91Y8Y4D0V5
Downloaded by: Sukhon Panomchan at July 29, 2004 11:46:57
AUTO GENERATED PDF Jun 30 2004 14:51:27 PDT