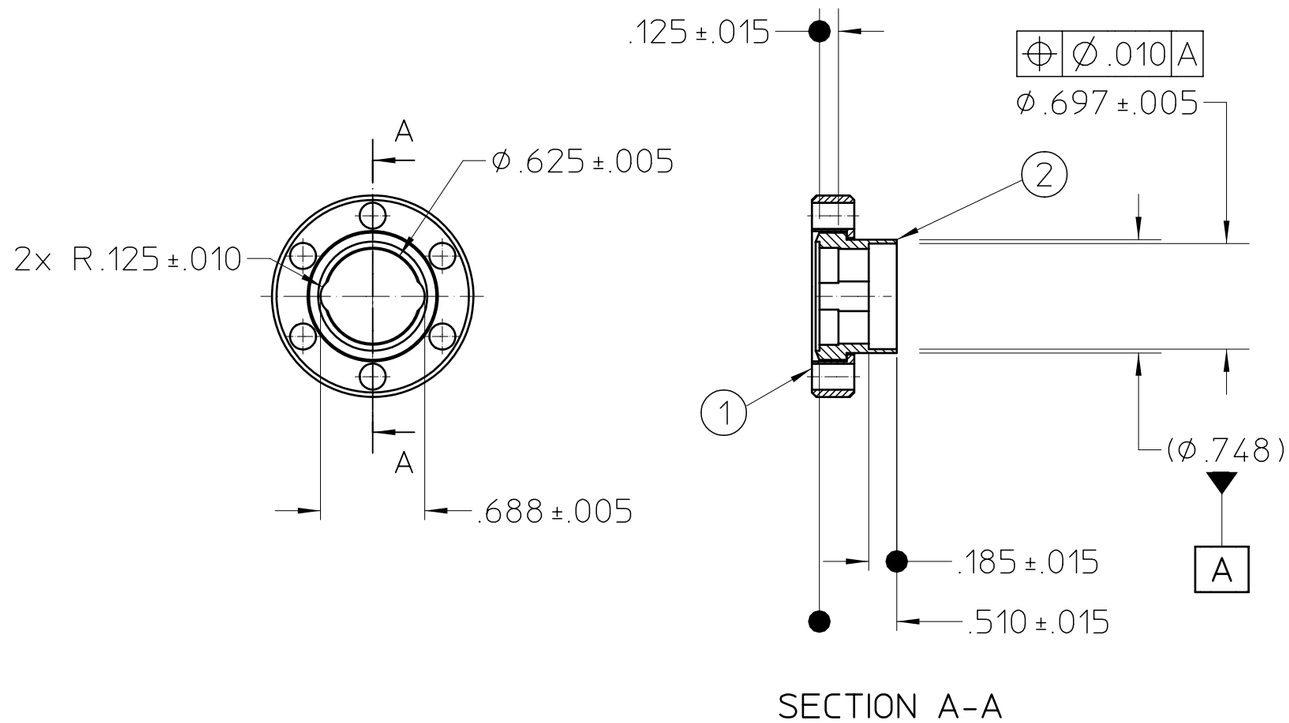

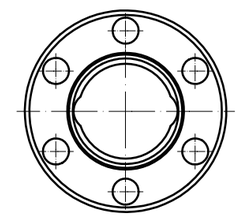

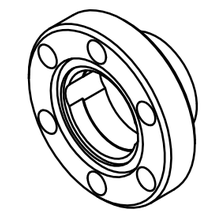

UNLESS OTHERWISE SPECIFIED,

1) DIMENSIONS AND TOLERANCING PER ASME Y14.5M-1994. ALL DIMENSIONS ARE IN INCHES. REFERENCE DIMENSIONS ARE SHOWN IN PARENTHESES. NOT ALL HIDDEN LINES ARE SHOWN.

2) THIS IS AN ULTRA HIGH VACUUM (UHV) PART AND REQUIRES SPECIAL ATTENTION TO AVOID UHV CONTAMINATION. READ LBNL SPECIFICATION M773 BEFORE PERFORMING ANY FABRICATION.

3) PROTECT FINISHED PART BY BAGGING OR SIMILAR METHOD TO PROTECT AND MAINTAIN CLEANLINESS DURING SHIPMENT AND STORAGE. TAKE EXTREME CARE NOT TO DING, SCRATCH, DENT, OR OTHERWISE MARK ANY MACHINED SURFACE.

REQD	ITEM	PART NO.	DESCRIPTION
1	2		MINI CFF CORE, FROM ITEM 1
1	1		CFF MINI, ROTATABLE, THRU HOLES (MDC #100004)

REV	AUTHOR	APPROVER	DATE	CHANGE DESCRIPTION
B	patton	patton	03-26-20	MOD TO JOHNSEN ULTRAVAC PREF
A	knolls	patton	12-19-20	INITIAL REVISION

UNLESS OTHERWISE SPECIFIED
TOLERANCES: .X ± .- .XX ± .-- .XXX ± .---
FRACTIONS: ± -/--
ANGLES: ± 0.5°
MACH. SURFS.: 63 ✓ OR BETTER
REF: ASME Y14.5M-1994, THREADS ARE CLASS 2
BREAK EDGES .016 MAX. ON MACHINED WORK
REMOVE BURRS, WELD SPLATTER & LOOSE SCALE

PROJECT NAME: Advanced Light Source
UNIQUE NUMBER: AL-0005-7916
DO NOT SCALE PRINT
SCALE: 1 : 1
CATEGORY CODE: AL 4153
THIRD ANGLE PROJECTION

ERNEST ORLANDO LAWRENCE BERKELEY NATIONAL LABORATORY
UNIVERSITY OF CALIFORNIA
BERKELEY LAB

ALS - INSERTION DEVICE BEAMLINES
BL 11.0.1 MONOCHROMATOR
MONO OPTICS CUSTOM MINI CFF

SHEET 1 OF 1 | SIZE: B | DWG NO: 26B027 | REV B

AUTO GENERATED PDF
Mar 26 2004 09:52:03 PST