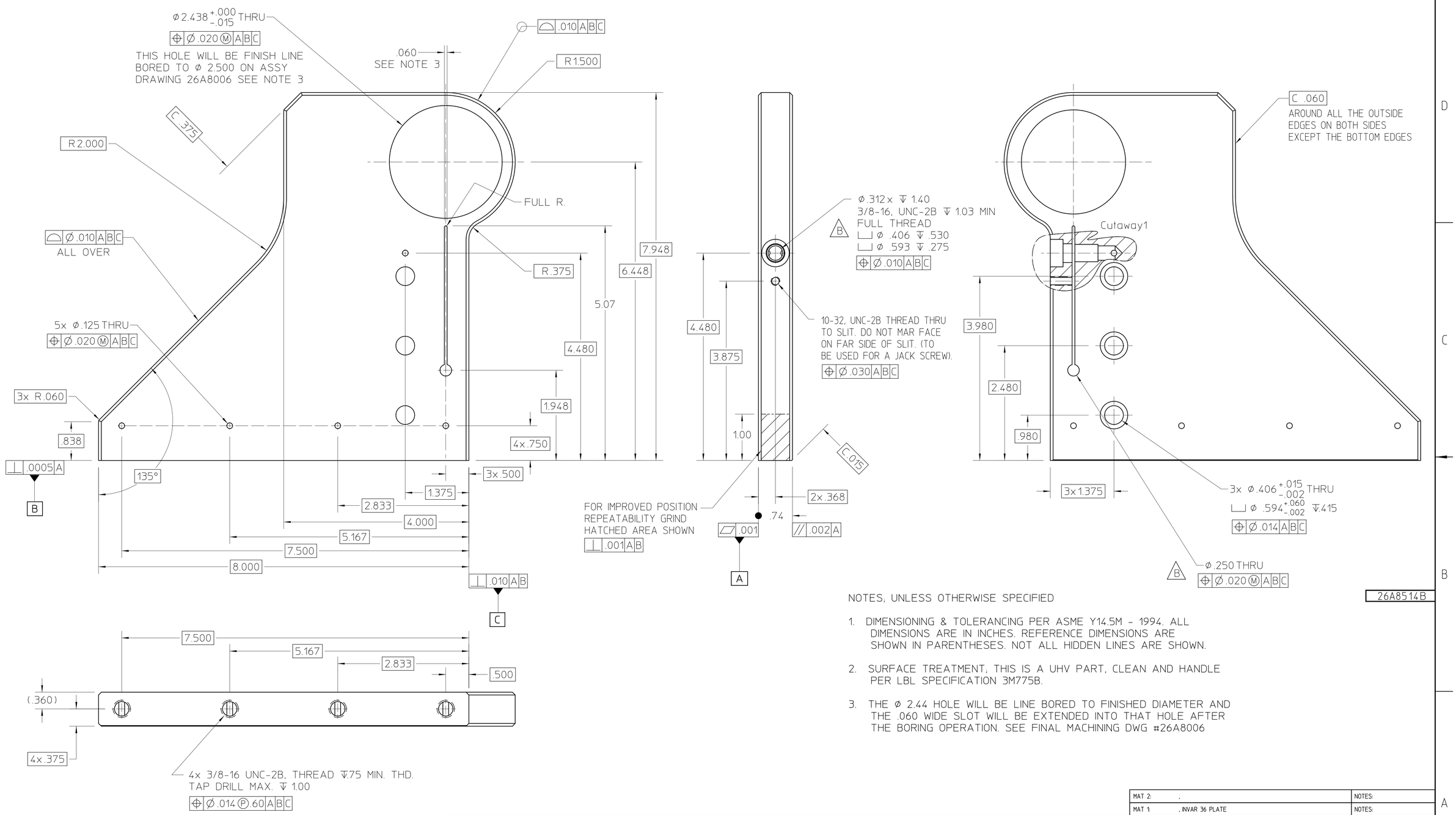

NOTES; UNLESS OTHERWISE SPECIFIED

1. DIMENSIONING & TOLERANCING PER ASME Y14.5M - 1994. ALL DIMENSIONS ARE IN INCHES. REFERENCE DIMENSIONS ARE SHOWN IN PARENTHESES. NOT ALL HIDDEN LINES ARE SHOWN.

2. SURFACE TREATMENT; THIS IS A UHV PART, CLEAN AND HANDLE PER LBL SPECIFICATION 3M775B.

3. THE Ø 2.44 HOLE WILL BE LINE BORED TO FINISHED DIAMETER AND THE .060 WIDE SLOT WILL BE EXTENDED INTO THAT HOLE AFTER THE BORING OPERATION. SEE FINAL MACHINING DWG #26A8006

MAT 2: .	NOTES:
MAT 1: . INVAR 36 PLATE	NOTES:

REV	ZONE	CHANGES	DWG BY	DATE	CHK BY	DATE	APP BY	DATE
B		ADD DIA .25 THRU, 3/8-16 WAS 3/6-16	patton	03-31-2004	N/A		patton	04-01-2004

UNLESS OTHERWISE SPECIFIED
TOLERANCES: X ± - FRAC. ± - ; XX ± .020 ANGLES ± .5° ; XXX ± .005 FINISH 63 √
THREADS ARE CLASS 2
CHAMFER ENDS OF ALL SCREW THREADS 30°
CUT 1.5 PITCH THRD RELIEF WITH ROUND NOSE TOOL ON MACHINE CUT THREADS.
BREAK EDGES .016 MAX. ON MACHINED WORK
REMOVE BURRS WELD SPLATTER & LOOSE SCALE
REFERENCES: ANSI Y14.5 & B46.1.

SHOP ORDERS
ACCT. NO. | SERIAL NO.
DATE ISSD. | DATE REQD. | NO. REQD.
DELIVER TO | IDENT. METH. SEE NOTES
SURFACE TREATMENT SEE NOTES
DWG. BY patton DATE 06-30-2003
CHK. BY patton DATE 12-19-2003
APP. BY patton DATE 12-19-2003

LAWRENCE BERKELEY LABORATORY
UNIVERSITY OF CALIFORNIA-BERKELEY
ALS - INSERTION DEVICE BEAMLINES
BL 11.0.1 MONOCHROMATOR
CRADLE STAND RIGHT UPRIGHT

PATENT CLEAR	DWG. TYPE	SHOWN ON	SCALE	DO NOT SCALE PRINTS
	DETAIL	26A799	1 : 1	
MICROFILMED	DESIGN ACCT. NO.	CATEGORY CODE	DWG. NO.	SIZE / REV.
	-	AL4153	26A8514	B

SHEET 1 OF 1

AUTO GENERATED PDF – Apr 01 2004 14:32:07 PST