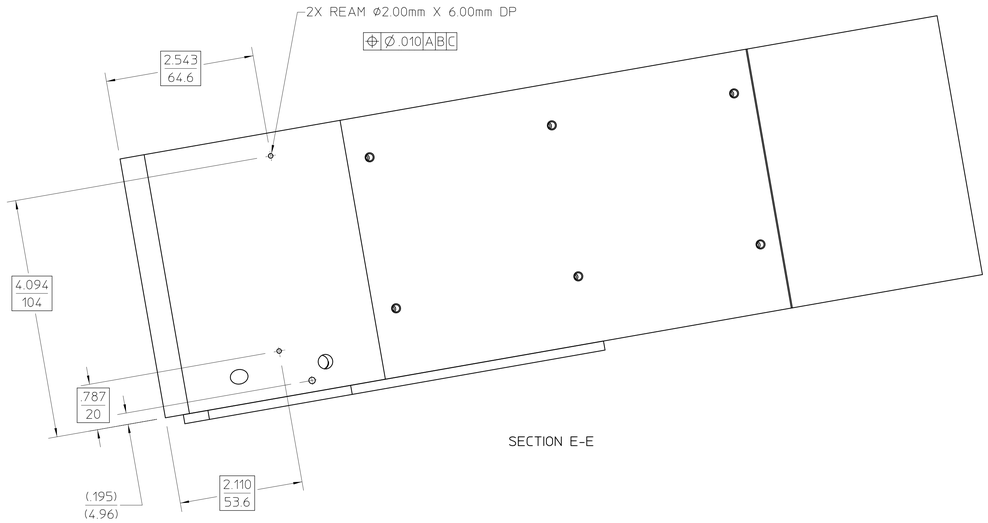

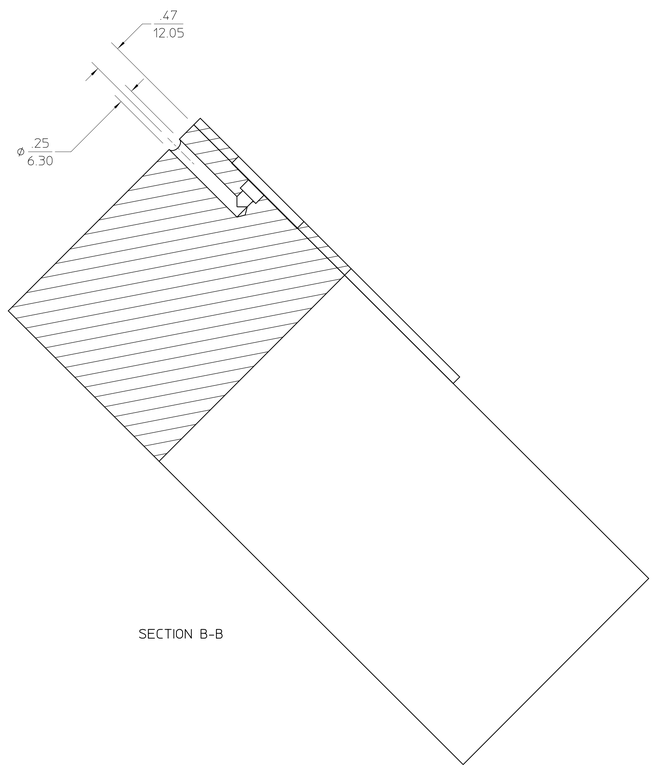

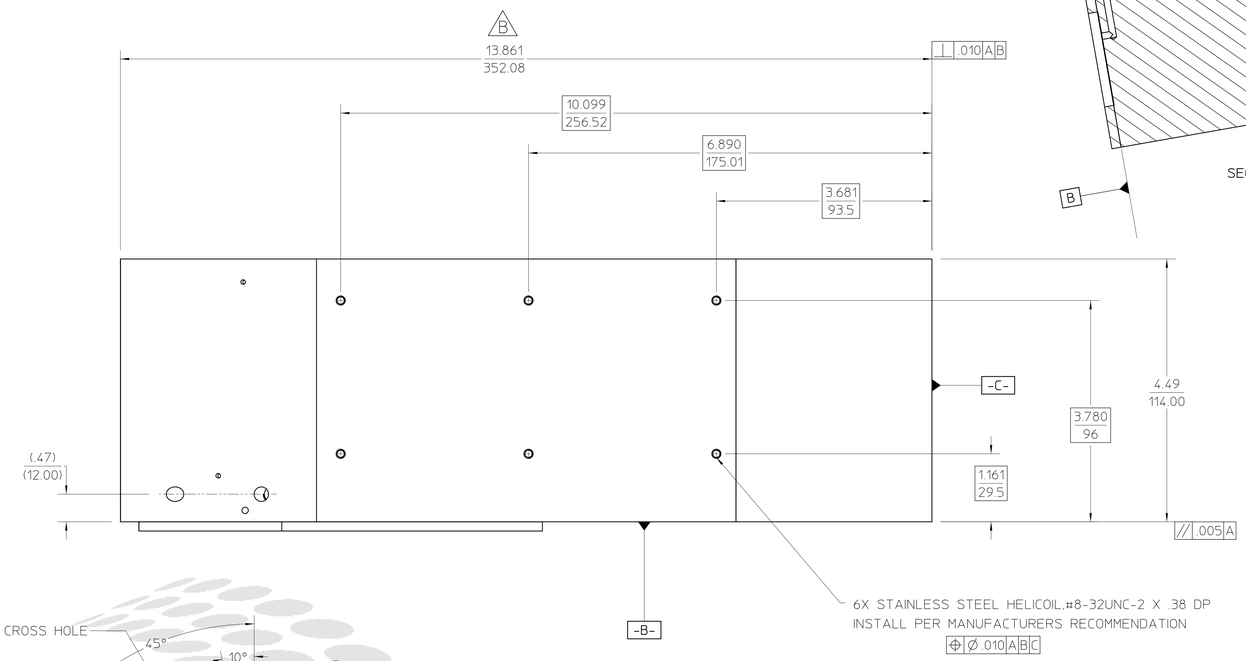

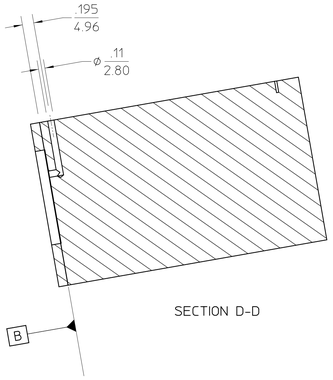

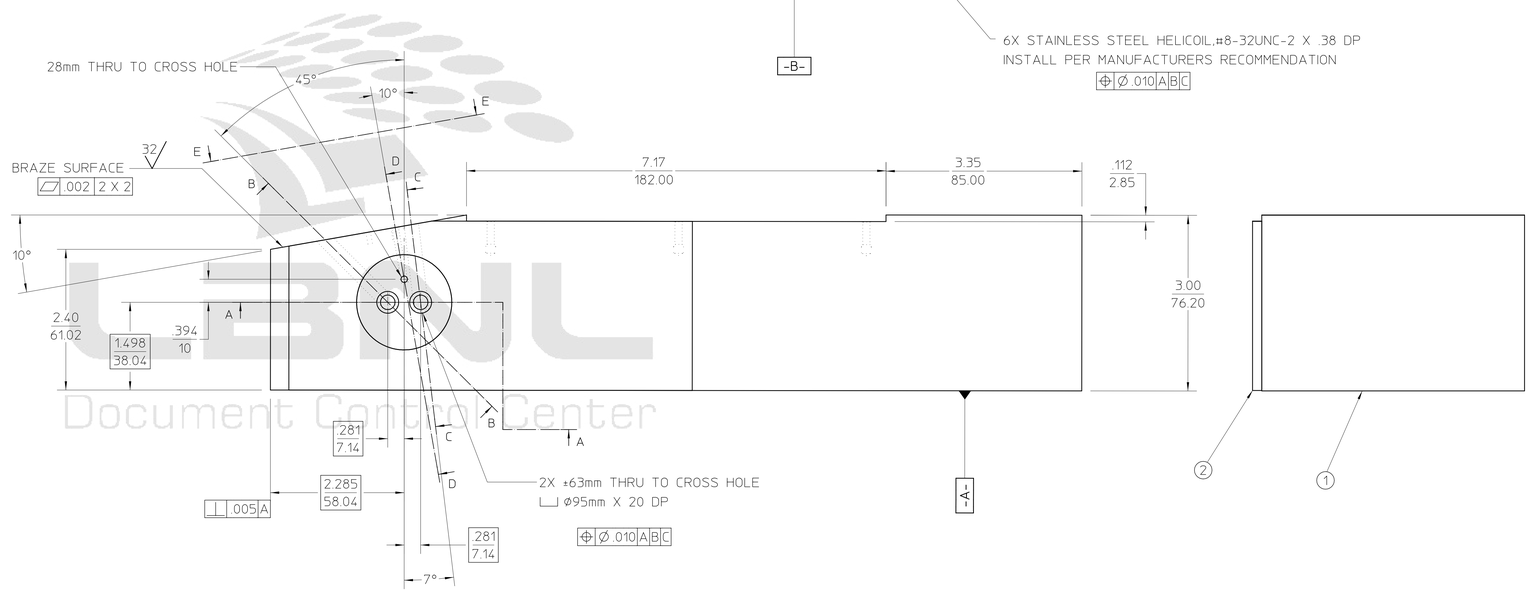

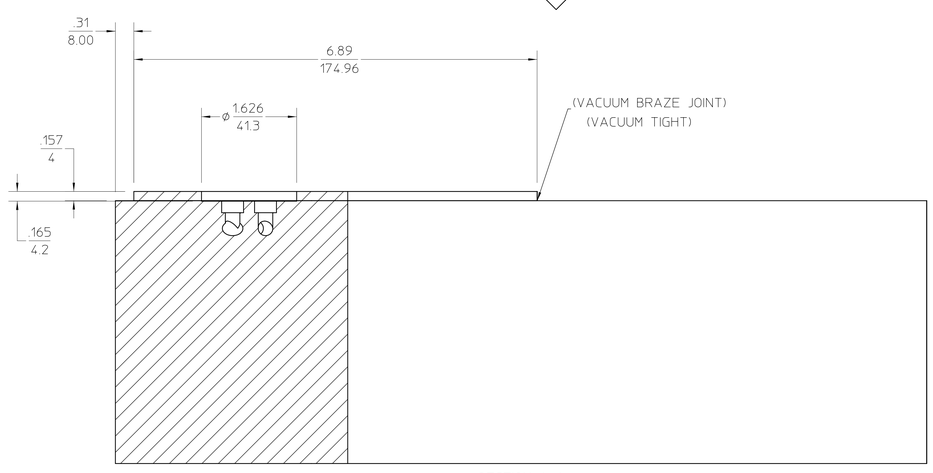

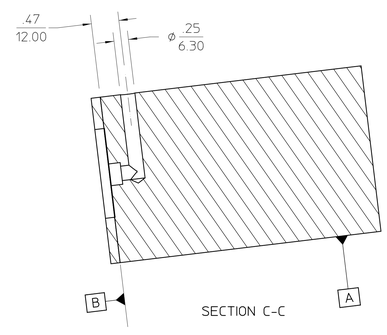

NOTES,UNLESS OTHERWISE SPECIFIED:

1. THIS IS A ULTRA HIGH VACUUM COMPONENT AND REQUIRES SPECIAL ATTENTION TO AVOID CONTAMINATION. REFER TO LBNL ENGINEERING SPECIFICATION #M20013. HIGH VACUUM USE CLEANING.
2. TOLERANCES SHOWN IN TITLE BLOCK ARE IN INCHES.
3. BRAZING TO BE CONDUCTED IN A VACUUM FURNACE. REFER TO LBNL ENGINEERING SPECIFICATION #M7184,MIRROR BRAZING TECHNIQUES.
4. DO NOT GRIND INDICATED BRAZING SURFACE.
5. ITEM 1 MUST BE BRAZED TO ITEM 2 PRIOR TO ANY MACHINING.

(UNIQUE ID NO.:AL-0011-1299)

REQD	ITEM	PART NO.	DESCRIPTION
1	2		STAINLESS STEEL,TYPE 304
1	1		OFHC COPPER

REV	AUTHOR	APPROVER	DATE	CHANGE DESCRIPTION
B	cummings	plate	10-21-04	ADDED OVERALL LENGHT DIMENSION TO COOPERBLOCK, ITEM #1
A	rawlins	plate	07-26-20	INITIAL REVISION

UNLESS OTHERWISE SPECIFIED
TOLERANCES: X± .1 .XX± .010 .XXX± .005; FRACTIONS: ± -/--; ANGLES: ± 1°; MACH. SURFS.: 63 ✓ OR BETTER
REF:ASME Y14.5M-1994, THREADS ARE CLASS 2
BREAK EDGES .016 MAX. ON MACHINED WORK
REMOVE BURRS, WELD SPLATTER & LOOSE SCALE

PROJECT NAME: Advanced Light Source
UNIQUE NUMBER: AL-0011-1299
DO NOT SCALE PRINT
SCALE: 1 : 1
CATEGORY CODE: AL 4160
THIRD ANGLE PROJECTION

ERNEST ORLANDO LAWRENCE BERKELEY NATIONAL LABORATORY
UNIVERSITY OF CALIFORNIA

ALS - INSERTION DEVICE BEAMLINES
BL 6.0 FRONT END
ABSORBER 1 SUB-ASSEMBLY RH

SHEET 1 OF 1 | SIZE: E | DWG NO: 26B580 | REV B

LBNL Document Control Center

Officially Released to the LBNL Document Control Center
Released: October 21st, 2004 DCC Auth Key: ELB64FFQ9Y

Downloaded by: Daniel Pulsifer at December 01, 2004 14:27:02

AUTO GENERATED PDF
Oct 21 2004 07:51:27 PDT