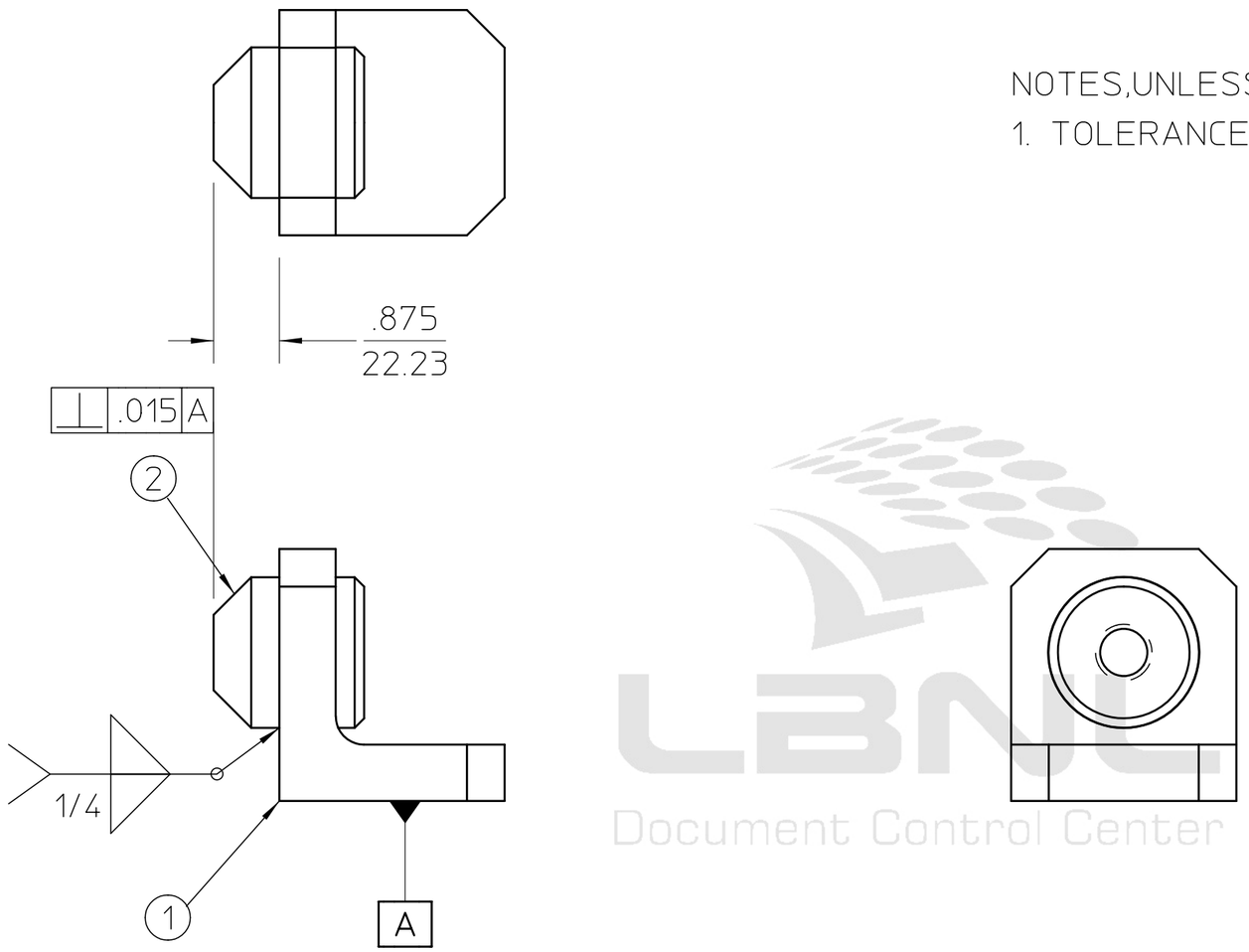

NOTES,UNLESS OTHERWISE SPECIFIED:

1. TOLERANCES SHOWN IN TITLE BLOCK ARE IN INCHES.

(UNIQUE ID NO.:AL-0011-5406)

REQD	ITEM	PART NO.	DESCRIPTION
1	2	26B573	STRUT BOSS 1 VERTICAL
1	1	26B574	VERTICAL STRUT ANGLE 1

REV	AUTHOR	APPROVER	DATE	CHANGE DESCRIPTION
A	rawlins	plate	07-26-20	INITIAL REVISION

UNLESS OTHERWISE SPECIFIED
TOLERANCES: .X± .- .XX± .-- .XXX± .---
FRACTIONS: ± -/--
ANGLES: ± -.-°/INCH
MACH. SURFS.: 125 ✓ OR BETTER
REF:ASME Y14.5M-1994, THREADS ARE CLASS 2
BREAK EDGES .016 MAX. ON MACHINED WORK
REMOVE BURRS, WELD SPLATTER & LOOSE SCALE

PROJECT NAME:
PROJECT NUMBER:
DO NOT SCALE PRINT
SCALE: 1 : 1
CATEGORY CODE: AL 4160
THIRD ANGLE PROJECTION

ERNEST ORLANDO LAWRENCE
BERKELEY NATIONAL LABORATORY
UNIVERSITY OF CALIFORNIA

ALS - INSERTION DEVICE BEAMLINES
BL 6.0 FRONT END
STRUT BOSS VERTICAL SUB-ASSEMBLY

SHEET 1 OF 1 | SIZE: B | DWG NO: 26B572 | REV A

LBNL Document Control Center

Officially Released to the LBNL Document Control Center
Released: July 26th, 2004 DCC Auth Key: I7GG79KD7K

Downloaded by: Daniel Pulsifer at December 01, 2004 14:27:01

AUTO GENERATED PDF
Jul 27 2004 14:09:03 PDT