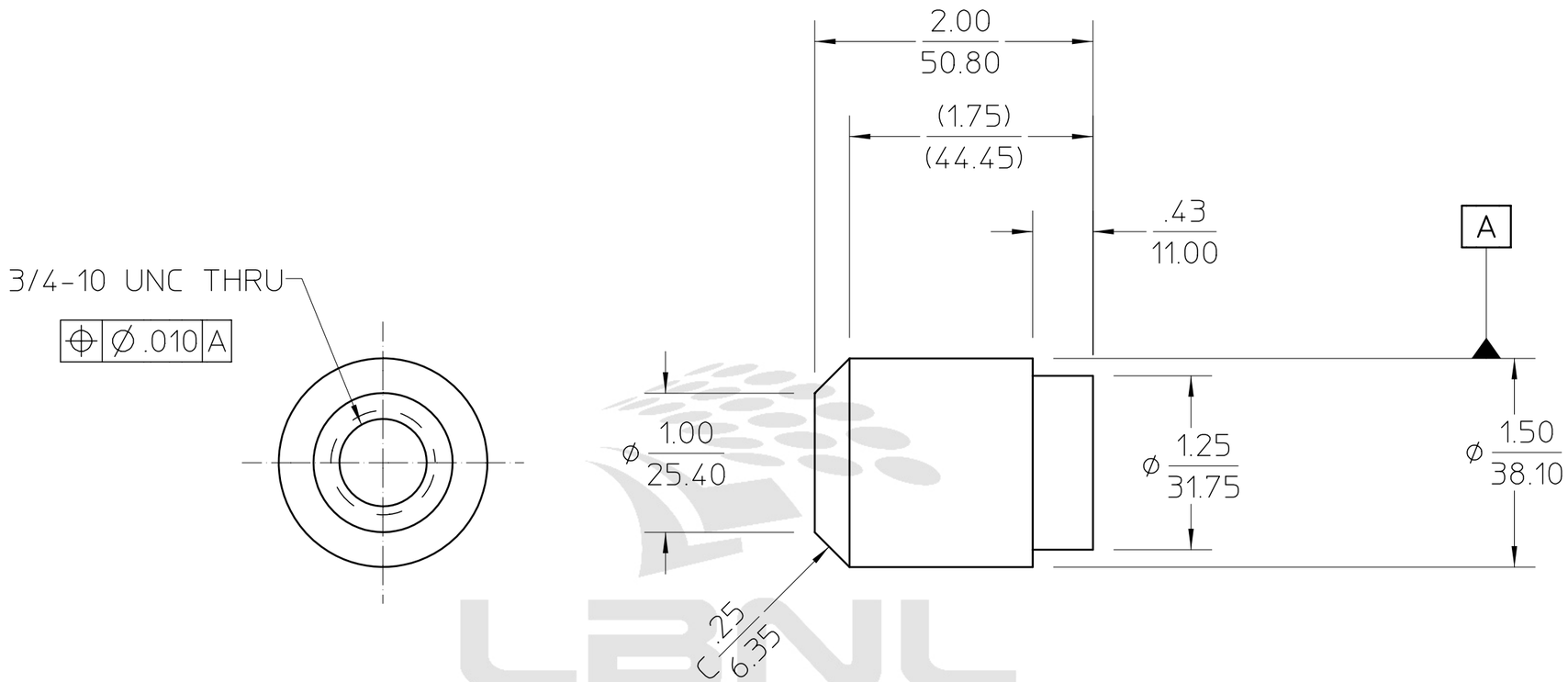

LBNL
Document Control Center

NOTES,UNLESS OTHERWISE SPECIFIED:

1. TOLERANCES SHOWN IN TITLE BLOCK ARE IN INCHES.

(UNIQUE ID NO.:AL-0008-9757)

REV	AUTHOR	APPROVER	DATE	CHANGE DESCRIPTION
A	rawlins	plate	07-26-20	INITIAL REVISION

UNLESS OTHERWISE SPECIFIED

TOLERANCES: .X± .1 .XX± .02 .XXX± .010
FRACTIONS: ± ---
ANGLES: ± 3°
MACH. SURFS.: 125✓ OR BETTER

REF:ASME Y14.5M-1994, THREADS ARE CLASS 2
BREAK EDGES .016 MAX. ON MACHINED WORK
REMOVE BURRS, WELD SPLATTER & LOOSE SCALE

MAT 2: , NOTES:
MAT 1: , STEEL, STRUCTURAL, A-36 NOTES:

PROJECT NAME:
PROJECT NUMBER:

DO NOT SCALE PRINT
SCALE: 1 : 1
CATEGORY CODE: AL 4160
THIRD ANGLE PROJECTION

ERNEST ORLANDO LAWRENCE
BERKELEY NATIONAL LABORATORY
UNIVERSITY OF CALIFORNIA

ALS - INSERTION DEVICE BEAMLINES
BL 6.0 FRONT END
HORIZONTAL STRUT BOSS 1

SHEET 1 OF 1 | SIZE: B | DWG NO: 26B562 | REV A

Officially Released to the LBNL Document Control Center
Released: July 28th, 2004 DCC Auth Key: DNPTHW5UDT
Downloaded by: Daniel Pulsifer at December 01, 2004 14:27:01
AUTO GENERATED PDF
Jul 27 2004 14:07:38 PDT