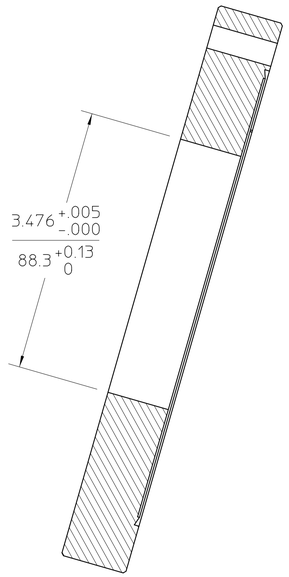

SECTION B-B

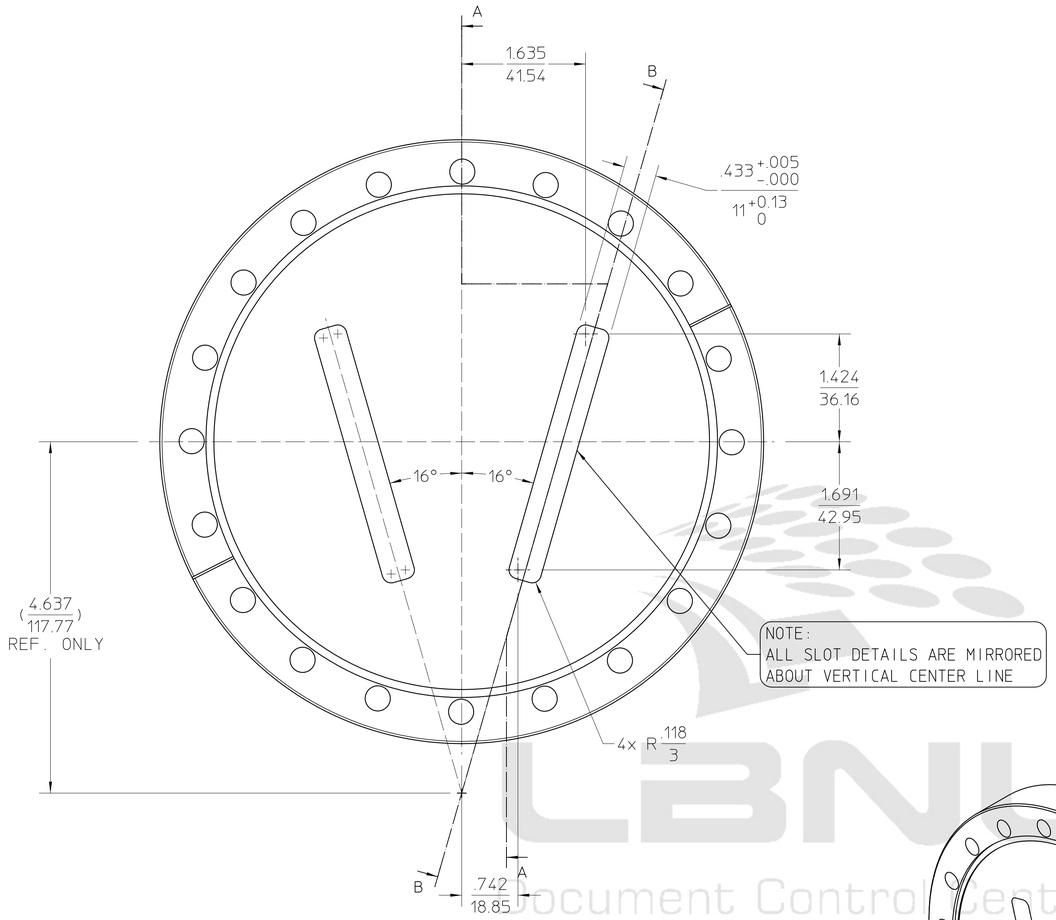

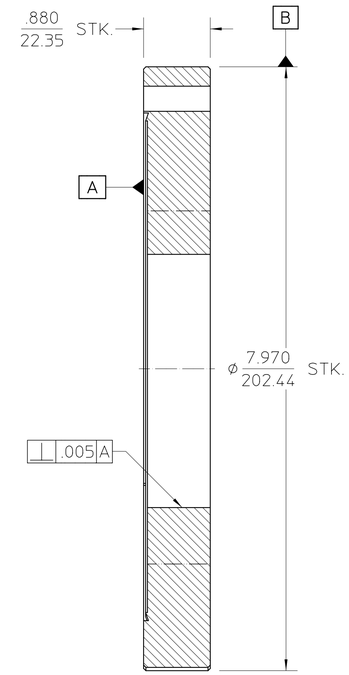

SECTION A-A

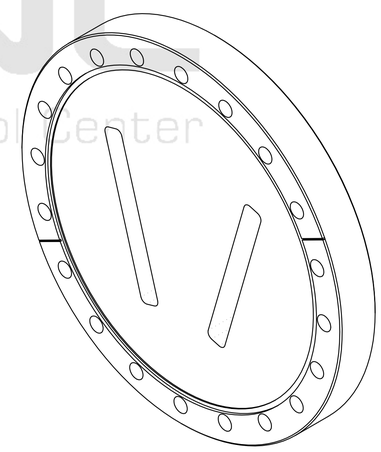

LBNL Document Control Center

NOTES:

1. THIS IS A ULTRA HIGH VACUUM COMPONENT AND REQUIRES SPECIAL ATTENTION TO AVOID CONTAMINATION. REFER TO LBNL ENGINEERING SPECIFICATION #M20013 BEFORE PERFORMING ANY FABRICATION PROCEDURES.

2. PROTECT ALL CONFLAT FLANGE KNIFE SEALING SURFACES AT ALL TIMES FROM ANY DENTS, DINGS OR SCRATCHES AT THE KNIFE EDGE WILL RENDER THEM USELESS.

3. TOLERANCES SHOWN IN THE DRAWING TITLE BOX ARE SHOWN IN INCHES. DIMENSIONS ARE SHOWN IN INCHES/MILLIMETERS. (UPPER/ LOWER)

(UNIQUE ID No.: AL-0008-9838)

REV	AUTHOR	APPROVER	DATE	CHANGE DESCRIPTION
A	cummings	plate	07-26-20	INITIAL REVISION

UNLESS OTHERWISE SPECIFIED
TOLERANCES: .X ± .03 .XX ± .01 .XXX ± .005; FRACTIONS: ± -/--; ANGLES: ± 0.1°/INCH; MACH. SURFS.: 63 ✓ OR BETTER
REF: ASME Y14.5M-1994, THREADS ARE CLASS 2
BREAK EDGES .016 MAX. ON MACHINED WORK
REMOVE BURRS, WELD SPLATTER & LOOSE SCALE

MAT 2: . NOTES:
MAT 1: FLG.,VAC.,NONROTATABLE-BLANK,8"OD,ST. STL.,"MDC" OR EQ. NOTES:

PROJECT NAME:
PROJECT NUMBER:

DO NOT SCALE PRINT
SCALE: 1 : 1
CATEGORY CODE: AL4160
THIRD ANGLE PROJECTION

ERNEST ORLANDO LAWRENCE
BERKELEY NATIONAL LABORATORY
UNIVERSITY OF CALIFORNIA

ALS - INSERTION DEVICE BEAMLINES
BL 6.0 FRONT END
VERTICAL MASK MOUNT FLANGE

SHEET 1 OF 1 | SIZE: D | DWG NO: 26B522 | REV A

Officially Released to the LBNL Document Control Center
Released: July 26th, 2004 DCC Auth Key: NSKUV07JFX
Downloaded by: Daniel Pulsifer at December 01, 2004 14:27:00
AUTO GENERATED PDF
Jul 27 2004 14:04:46 PDT