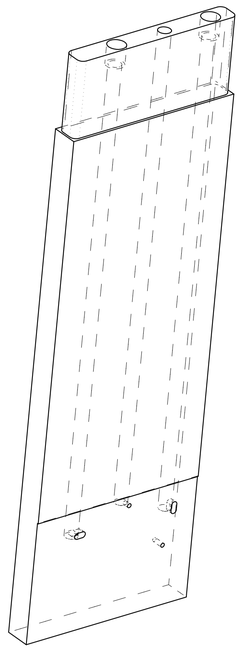

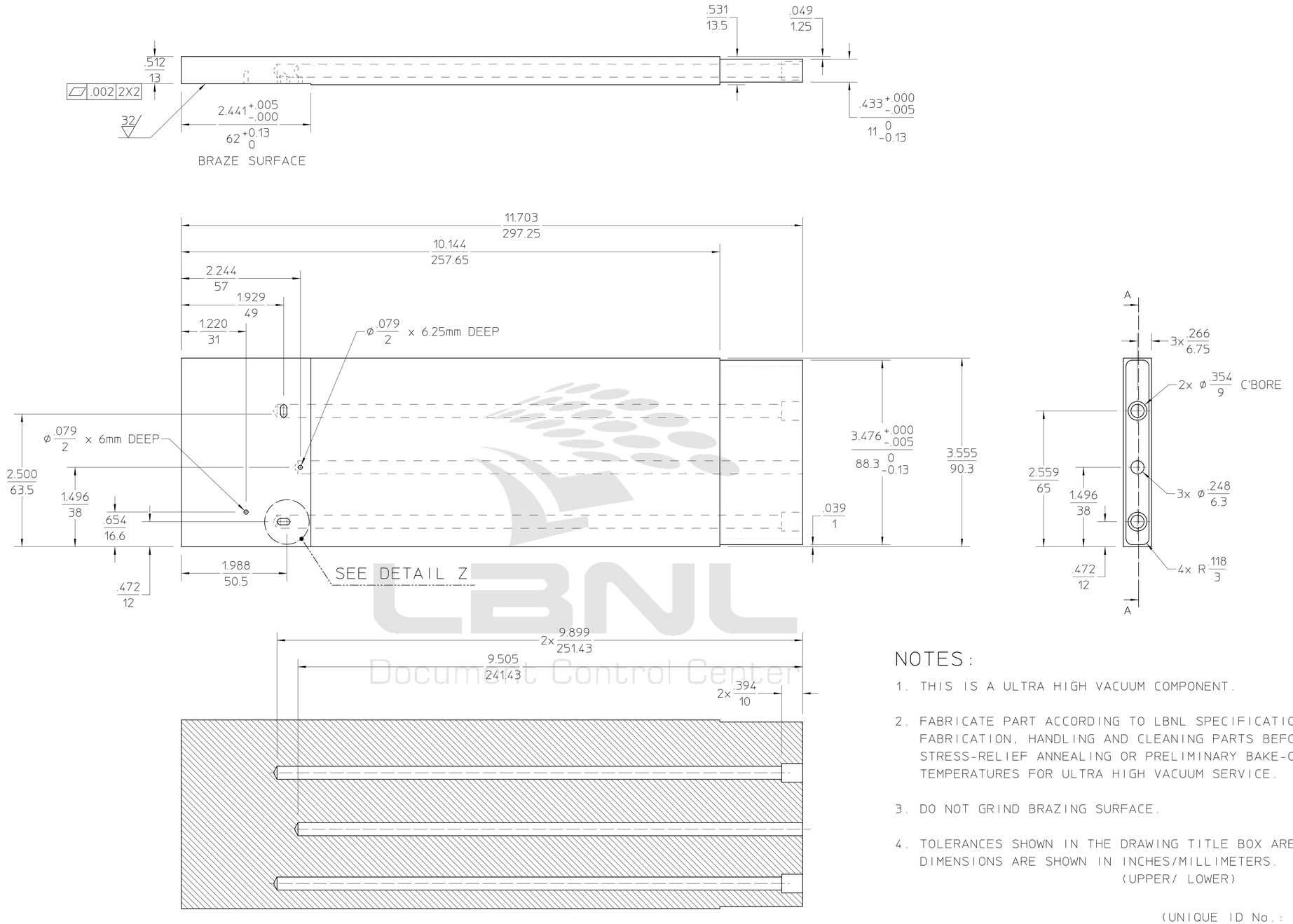

NOTES:

1. THIS IS A ULTRA HIGH VACUUM COMPONENT.
2. FABRICATE PART ACCORDING TO LBNL SPECIFICATION #M773. FABRICATION, HANDLING AND CLEANING PARTS BEFORE BRAZING, STRESS-RELIEF ANNEALING OR PRELIMINARY BAKE-OUT AT HIGH TEMPERATURES FOR ULTRA HIGH VACUUM SERVICE.
3. DO NOT GRIND BRAZING SURFACE.
4. TOLERANCES SHOWN IN THE DRAWING TITLE BOX ARE SHOWN IN INCHES. DIMENSIONS ARE SHOWN IN INCHES/MILLIMETERS. (UPPER/ LOWER)

(UNIQUE ID No.: AL-0008-9851)

REV	AUTHOR	APPROVER	DATE	CHANGE DESCRIPTION
A	cummings	plate	07-26-20	INITIAL REVISION

UNLESS OTHERWISE SPECIFIED
TOLERANCES: .X± .03 .XX± .01 .XXX± .005; FRACTIONS: ± -/--; ANGLES: ± 0.1°/INCH; MACH. SURFS.: 63 ✓ OR BETTER
REF: ASME Y14.5M-1994, THREADS ARE CLASS 2
BREAK EDGES .016 MAX. ON MACHINED WORK
REMOVE BURRS, WELD SPLATTER & LOOSE SCALE

MAT 2: , NOTES:
MAT 1: , STAINLESS STEEL 304 NOTES:

PROJECT NAME:
PROJECT NUMBER:
DO NOT SCALE PRINT
SCALE: 1 : 1
CATEGORY CODE: AL 4160
THIRD ANGLE PROJECTION

ERNEST ORLANDO LAWRENCE BERKELEY NATIONAL LABORATORY
UNIVERSITY OF CALIFORNIA
ALS - INSERTION DEVICE BEAMLINES
BL 6.0 FRONT END
UPPER VERTICAL MASK COOLING BRAZE PLATE
SHEET 1 OF 1 SIZE: D DWG NO: 26B517 REV A

AUTO GENERATED PDF
Jul 27 2004 14:03:47 PDT

Officially Released to the LBNL Document Control Center
Released: July 26th, 2004 DCC Auth Key: AK01WIKS7J
Downloaded by: Daniel Pulsifer at December 01, 2004 14:26:59