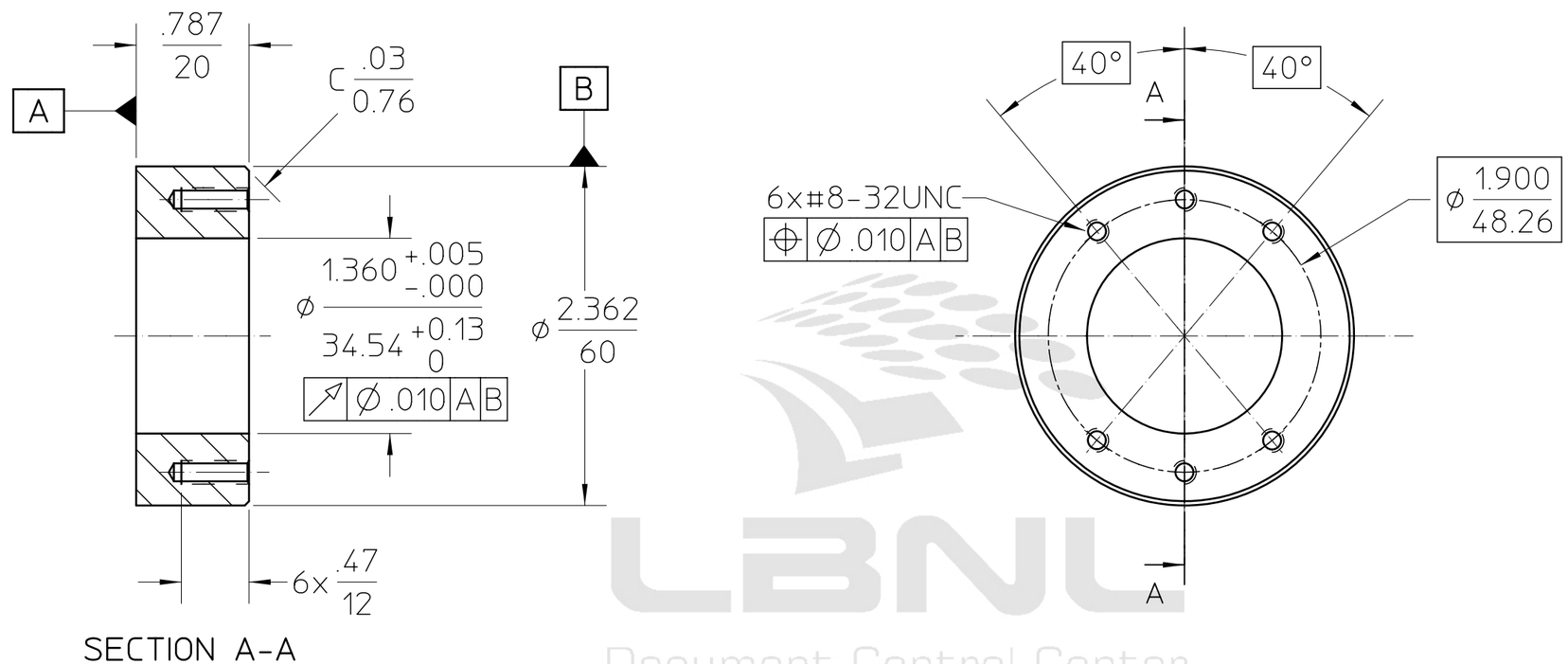

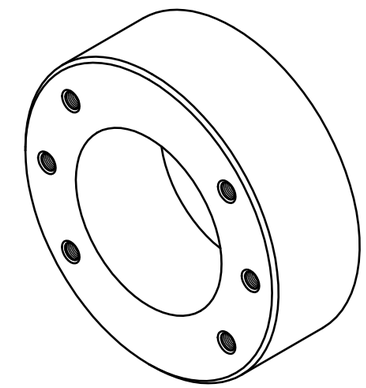

LBNL
Document Control Center

NOTES; UNLESS OTHERWISE SPECIFIED

1. TOLERANCES SHOWN IN TITLE BOX ARE SHOWN IN INCHES

REQD	ITEM	PART NO.	DESCRIPTION
			BAR OR PLATE SST TYPE 304

REV	AUTHOR	APPROVER	DATE	CHANGE DESCRIPTION
A	rlow	plate	07-27-20	INITIAL REVISION

UNLESS OTHERWISE SPECIFIED
TOLERANCES: .X± .- .XX±.02- .XXX±.010
FRACTIONS: ± -/--
ANGLES: ± -.-°/INCH
MACH. SURFS.: 125✓ OR BETTER
REF:ASME Y14.5M-1994, THREADS ARE CLASS 2
BREAK EDGES .016 MAX. ON MACHINED WORK
REMOVE BURRS, WELD SPLATTER & LOOSE SCALE

PROJECT NAME: Advanced Light Source
UNIQUE NUMBER: AL-0006-5099
DO NOT SCALE PRINT
SCALE: 1 : 1
CATEGORY CODE: AL 4160
THIRD ANGLE PROJECTION

ERNEST ORLANDO LAWRENCE
BERKELEY NATIONAL LABORATORY
UNIVERSITY OF CALIFORNIA
BERKELEY LAB

ALS - INSERTION DEVICE BEAMLINES
BL 6.0 FRONT END
LIMIT SWITCH SPACER

SHEET 1 OF 1 | SIZE: B | DWG NO: 26B200 | REV A

Officially Released to the LBNL Document Control Center
Released: July 27th, 2004 DCC Auth Key: P0OM90R6CJ
Downloaded by: Daniel Pulsifer at December 01, 2004 14:26:58
AUTO GENERATED PDF
Jul 27 2004 15:03:44 PDT