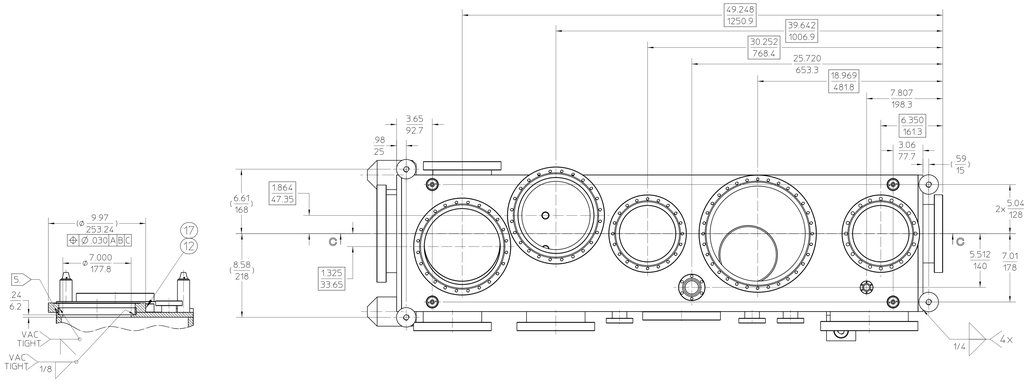

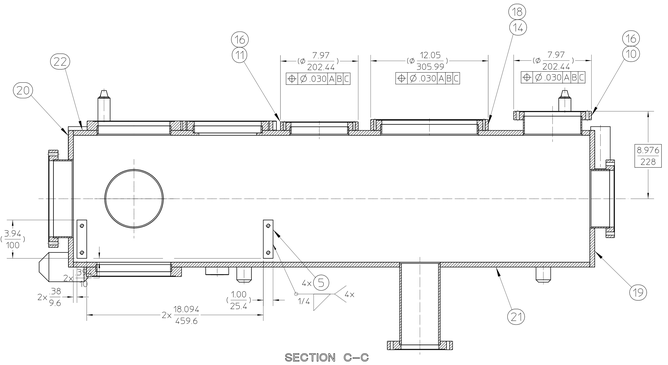

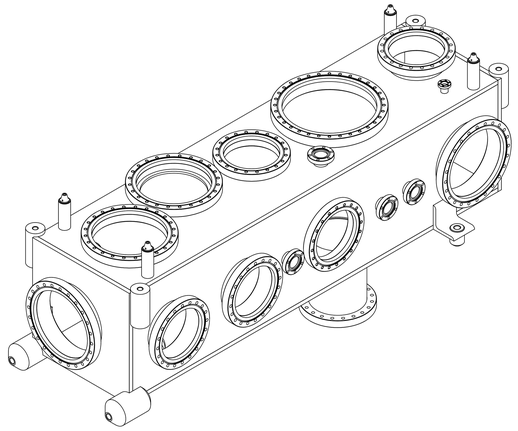

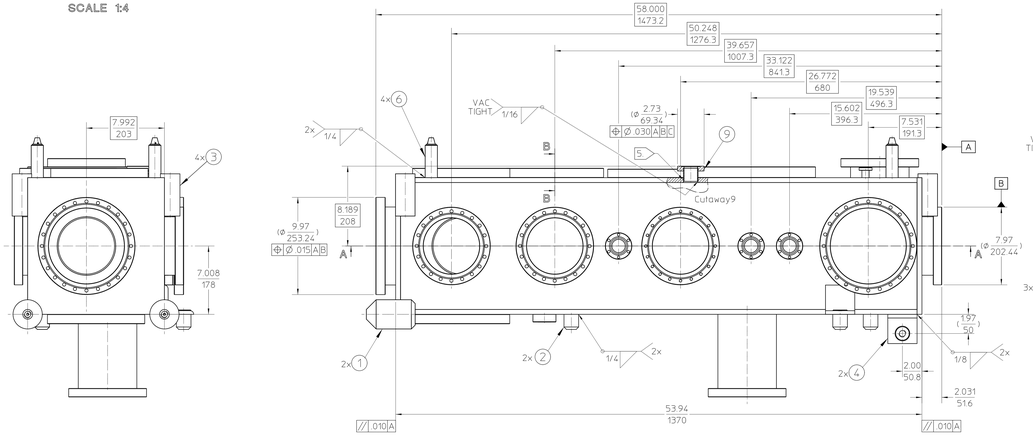

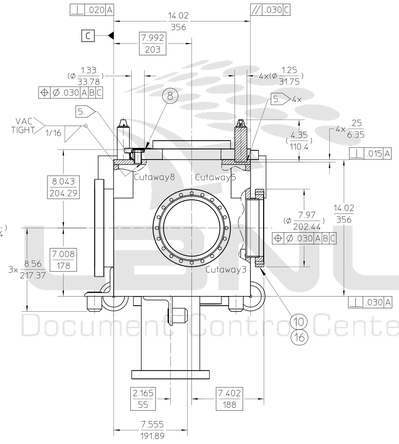

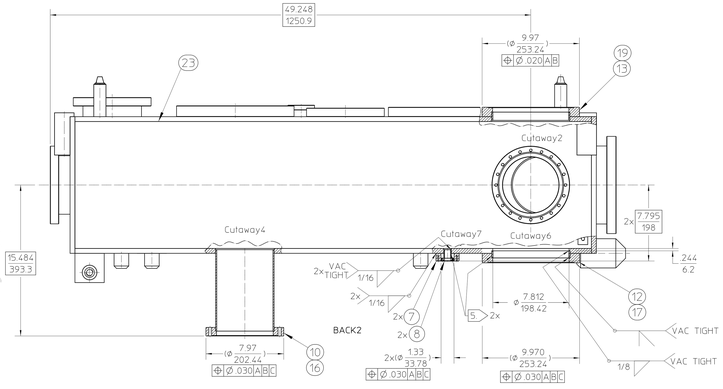

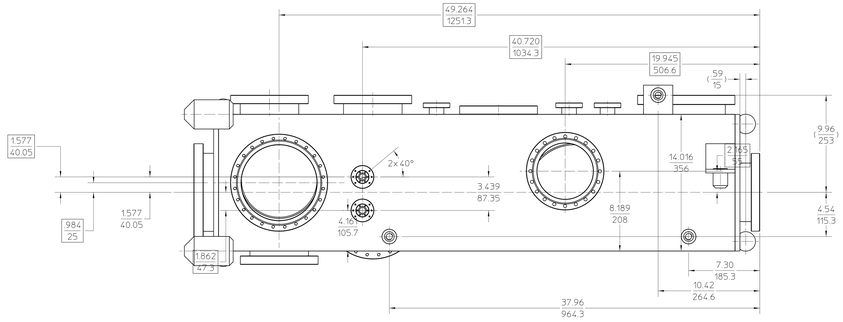

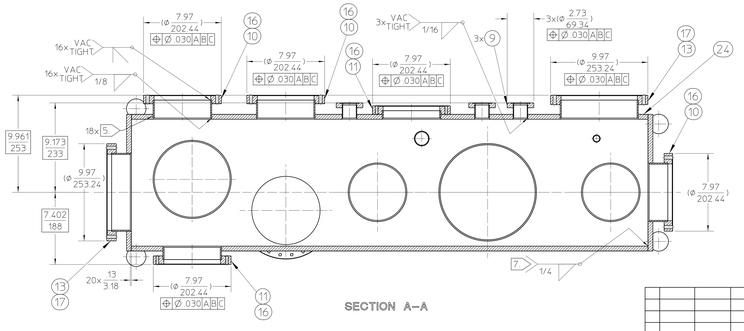

NOTES:

1. THIS IS A VACUUM COMPONENT. AND REQUIRES SPECIAL ATTENTION TO AVOID CONTAMINATION. REFER TO LBL ENG. SPEC. m M20013 BEFORE PREFORMING ANY FABRICATION PROCEDURES.
2. PROTECT ALL CONFLAT FLANGE KNIFE SEALING SURFACES AT ALL TIMES. ANY DENTS, DINGS OR SCRATCHES AT THE KNIFE EDGE WILL RENDER THEM USELESS.
3. CONFLAT FLANGE BOLT CIRCLE POSITIONS SHOULD STRADDLE THE VERTICAL CENTERLINE WHENEVER POSSIBLE.
4. DIMENSIONING & TOLERANCING PER ASME Y14.5-1994. ALL DIMENSIONS ARE SHOWN IN INCHES/MILLIMETERS. REFERENCE DIMENSIONS ARE SHOWN IN PARENTHESES.
5. PROVIDE .010in/.25mm MAX. DIAMETRAL CLEARANCE PRIOR TO WELDING.
6. ALL WELD SIZE ARE SHOWN IN FRACTIONAL INCHES.
7. ALL INTERNAL CORNERS TO HAVE A CONTINOUS WELD AND MUST BE VACUUM TIGHT.
8. TOLERANCES SHOWN IN TITLE BOX ARE SHOWN IN INCHES.

REQD	ITEM	PART NO	DESCRIPTION
1	24		PLATE 1/2" THK SST TYPE 304
1	23		PLATE 1/2" THK SST TYPE 304
1	22		PLATE 1/2" THK SST TYPE 304
1	21		PLATE 1/2" THK SST TYPE 304
1	20		PLATE 1/2" THK SST TYPE 304
1	19		PLATE 1/2" THK SST TYPE 304
1	18		TUBING VACUUM 10"ODx 12"WALL SST TYPE 304 "MDC"#480014
4	17		TUBING VACUUM 8"ODx 12"WALL SST TYPE 304 "MDC"#480013
9	16		TUBING VACUUM 6"ODx 12"WALL SST TYPE 304 "MDC"#480012
	15		
1	14		FLANGE CF DEL-SEAL 12" NON-ROT.TAPPED "MDC"#130093
2	13		FLANGE CF DEL-SEAL 10" NON-ROT. "MDC"#110033
2	12		FLANGE CF DEL-SEAL 10" NON-ROT.TAPPED "MDC"#130033
3	11		FLANGE CF DEL-SEAL 8" NON-ROT.TAPPED "MDC"#130031
6	10		FLANGE CF DEL-SEAL 8" NON-ROT."MDC"#110031
4	9		HALF NIPPLE CF DEL-SEAL 2 3/4" NON-ROT. "MDC"#401002
3	8		HALF NIPPLE CF DEL-SEAL 1 1/3" NON-ROT.TAPPED "MDC"#401023
2	7	268200	LIMIT SWITCH SPACER
4	6	2005363	SURVEY FIDUCIAL POST
4	5	268190	FASTENER PLATE
2	4	268188	STRUT ANGLE BOSS
6	3	268187	BOSS HOIST RING
2	2	268186	HORIZONTAL STRUT BOSS
2	1	268185	VERTICAL STRUT BOSS

REV	AUTHOR	APPROVER	DATE	CHANGE DESCRIPTION
B	rowlins	plate	10-15-04	REPLACED ITEM 15 WITH ADDITIONAL ITEM 12
A	rlow	plate	07-27-20	INITIAL REVISION

UNLESS OTHERWISE SPECIFIED: X± XXX± 02 XXX± 010; FRACTIONS ± ±/-; ANGLES ±1°/INCH; MACH. SURFS 125√ RMS; DO NOT SCALE PRINT; REF ASME Y14.5M-1994, THREADS ARE CLASS 2B; BREAK EDGES .016 MAX. ON MACHINED WORK; REMOVE BURRS, WELD SPLATTER & LOOSE SCALE; THIRD ANGLE PROJECTION; UNIQUE NUMBER: AL-0006-5115; SCALE: 1:4; CATEGORY CODE: AL 4 10 0

PROJECT NAME: Advanced Light Source

ERNEST ORLANDO LAWRENCE BERKELEY NATIONAL LABORATORY
UNIVERSITY OF CALIFORNIA

ALS - INSERTION DEVICE BEAMLINES
BL 6.0 FRONT END
PS/PSS VACUUM CHAMBER WELDMENT

SHEET 1 OF 1 SIZE 5 DWG NO. 26B192 REV B

AUTO GENERATED PDF
Oct 15 2004 13:25:11 PDT

Officially Released to the LBNL Document Control Center
Released: October15th, 2004 DCC Auth Key: AFWFDITS40
Downloaded by: Daniel Pulsifer at December 01, 2004 14:26:58