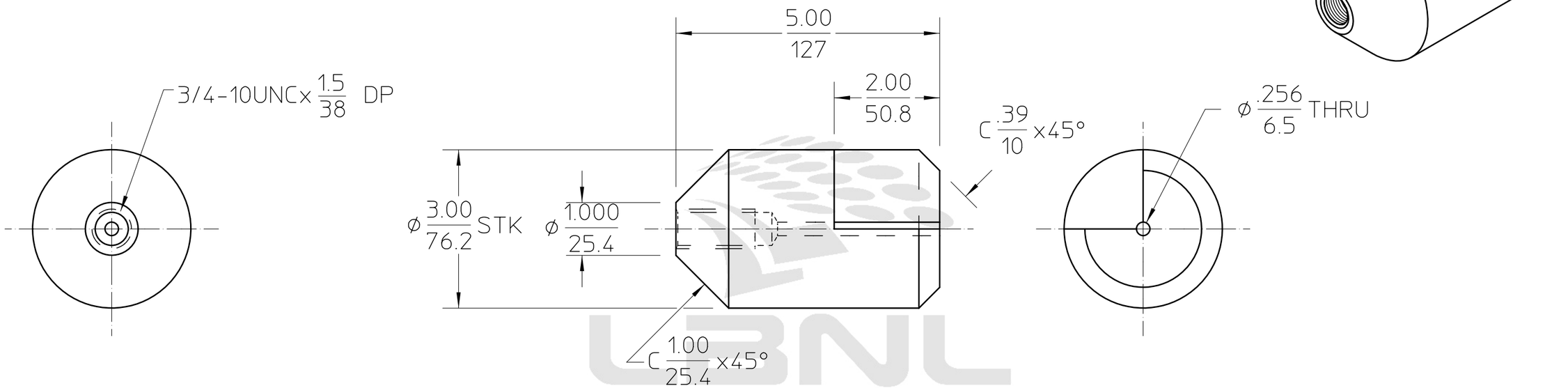

LBNL
Document Control Center

NOTES; UNLESS OTHERWISE SPECIFIED

1. TOLERANCES SHOWN IN TITLE BOX ARE SHOWN IN INCHES.

REQD	ITEM	PART NO.	DESCRIPTION
			BAR ROUND, 3" DIA SST TYPE 304

REV	AUTHOR	APPROVER	DATE	CHANGE DESCRIPTION
A	rlow	plate	07-27-20	INITIAL REVISION

UNLESS OTHERWISE SPECIFIED
TOLERANCES: .X± .- .XX±.02 .XXX±.010
FRACTIONS: ± -/--
ANGLES: ±1°/INCH
MACH. SURFS.: 125 OR BETTER
REF: ASME Y14.5M-1994, THREADS ARE CLASS 2
BREAK EDGES .016 MAX. ON MACHINED WORK
REMOVE BURRS, WELD SPLATTER & LOOSE SCALE

PROJECT NAME: Advanced Light Source
UNIQUE NUMBER: AL-0006-5031
DO NOT SCALE PRINT
SCALE: 1:2
CATEGORY CODE: AL 4160
THIRD ANGLE PROJECTION

ERNEST ORLANDO LAWRENCE
BERKELEY NATIONAL LABORATORY
UNIVERSITY OF CALIFORNIA
BERKELEY LAB

ALS - INSERTION DEVICE BEAMLINES
BL 6.0 FRONT END
VERTICAL STRUT BOSS

SHEET 1 OF 1 | SIZE: B | DWG NO: 26B185 | REV A

Officially Released to the LBNL Document Control Center
Released: July 27th, 2004 DCC Auth Key: IQQVE60VB5
Downloaded by: Daniel Pulsifer at December 01, 2004 14:26:58
AUTO GENERATED PDF
Jul 27 2004 15:03:31 PDT