REQ	ITEM	PART NUMBER	DESCRIPTION
1	1	23G8323	BRACKET - LIMIT SWITCH
4	2	23G8561	NUT PLATE - LIMIT SWITCH
4	3		DOUBLE POLE,DOUBLE THROW,BASIC SWITCH #DT-2RV212-A7. MADE BY MICRO-SWITCH, FREEPORT ILL. 61032
8	4	5305-20803	SCREW,MACH.,ROUND HD,STAINLESS #4-40 X 1"LG
8	5	5310-21875	WASHER, FLAT, ROUND, STAINLESS #4

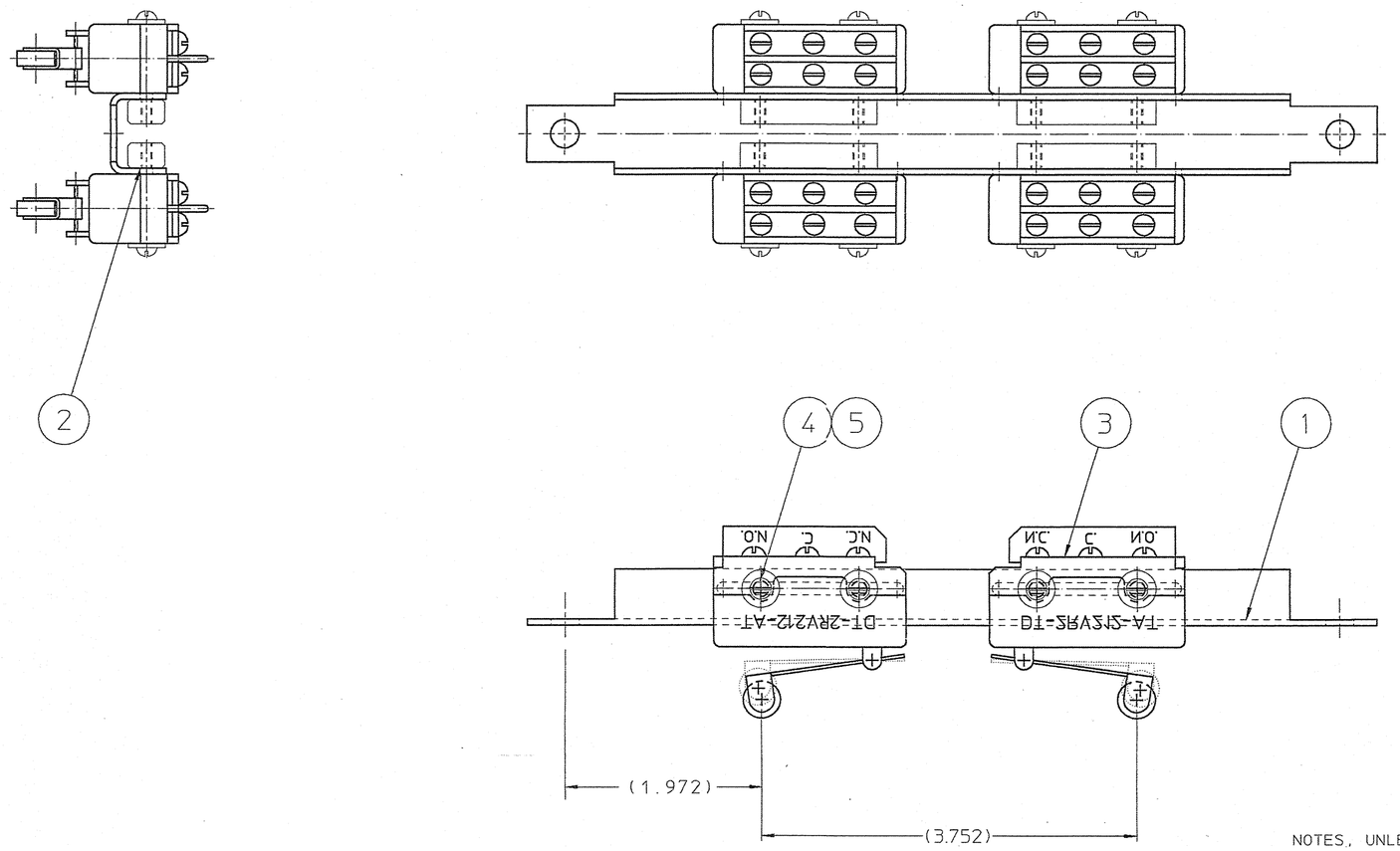

23G8593

NOTES, UNLESS OTHERWISE SPECIFIED:

1. ALL DIMENSIONS ARE IN INCHES. REFERENCE DIMENSIONS ARE SHOWN IN PARENTHESES.

REV	DWG	CHK	ZONE	DATE	CHANGES

UNLESS OTHERWISE SPECIFIED

TOLERANCES			
	.X ±	FRAC. ±	
	.XX ±	ANGLES ±	
	.XXX ±	FINISH	

REFERENCES: ANSI Y14.5 & B46.1.

SHOP ORDERS

ACCT. NO.		SERIAL NO.
DATE ISSD	DATE REQD.	NO. REQD.
DELIVER TO		
SURFACE TREATMENT		
IDENT. METH.		
DWG. BY MICHAEL J. KNOLLS		DATE 2-10-92
CHK. BY T.SWAIN		DATE 2-10-92

LAWRENCE BERKELEY LABORATORY
UNIVERSITY OF CALIFORNIA-BERKELEY

ALS - BEND MAGNET BEAM LINES

BEND MAGNET BEAM LINES - GENERAL

LIMIT SWITCH ASSEMBLY - ACTUATOR SYSTEM

PATENT CLEAR	DWG. TYPE	SHOWN ON	SCALE	DO NOT SCALE PRINTS
PC	CAD-DETAIL	23G9286	FULL	
MICROFILMED	DESIGN ACCT. NO.	CATEGORY CODE	DWG. NO.	SIZE / REV.
M		AL6000	23G8593	

--FULL PAGE FAX PRINT PAGE 1.- 7/27/04 9:24:58 AM