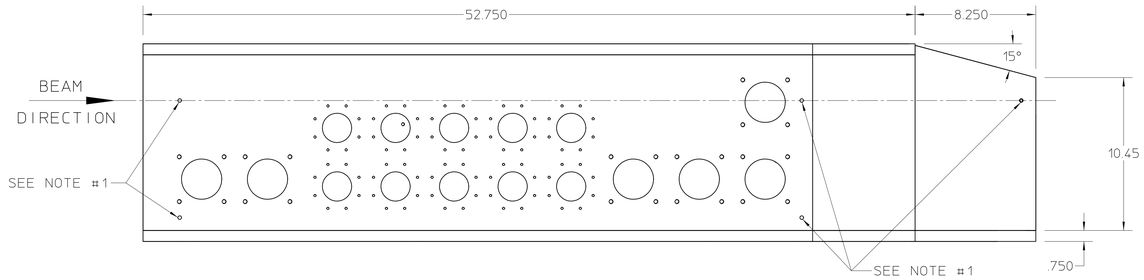

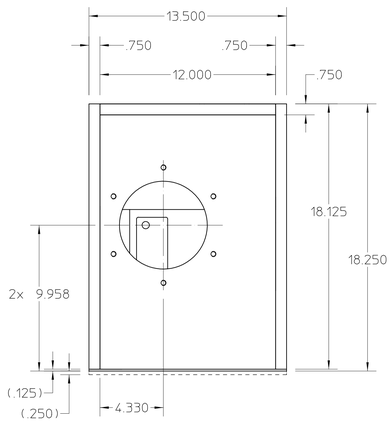

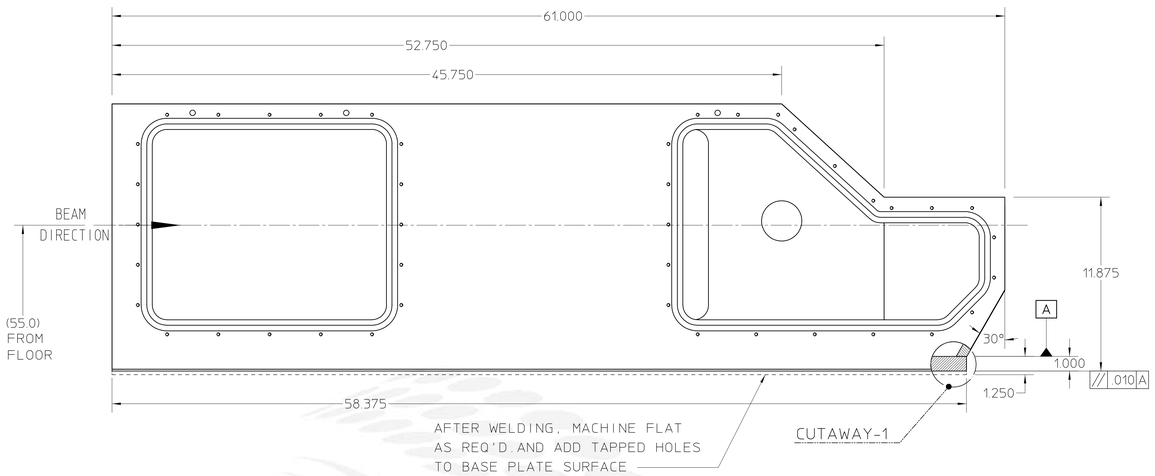

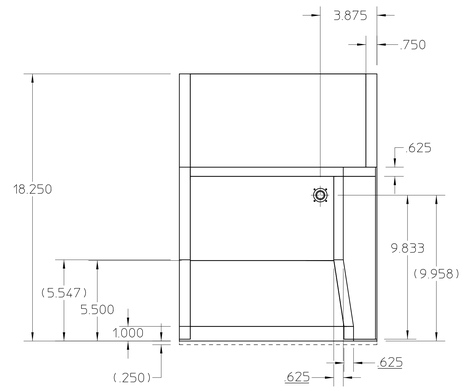

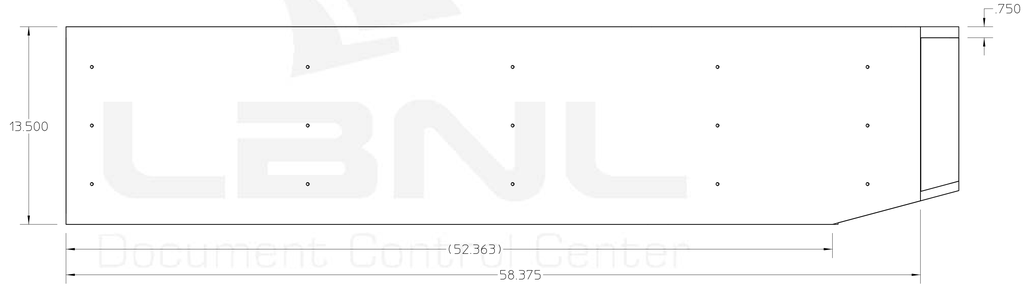

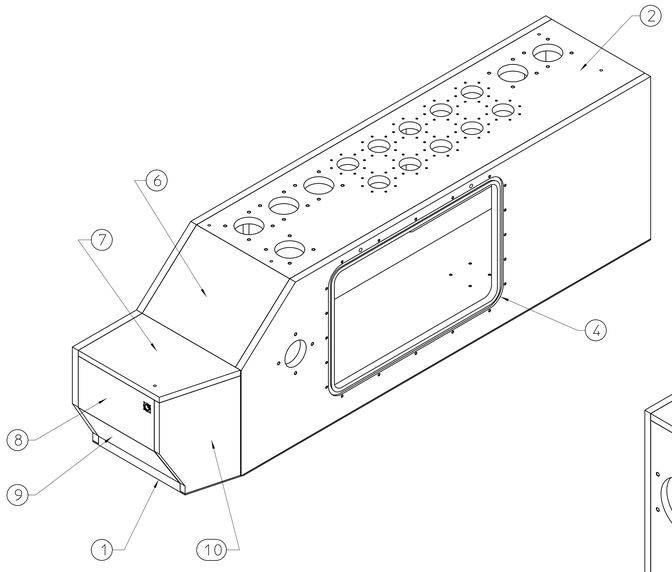

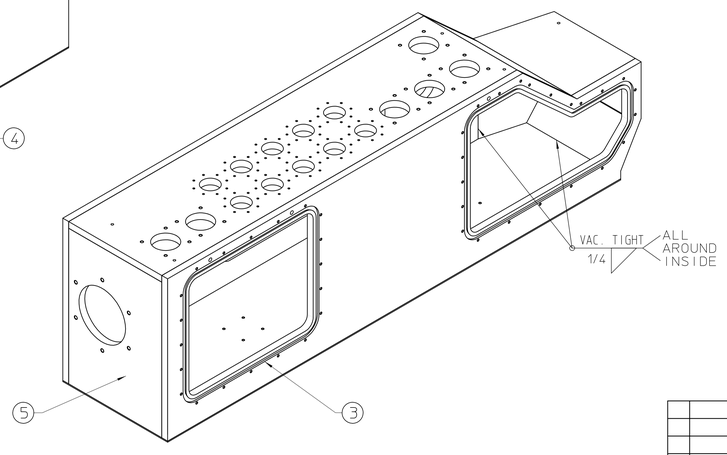

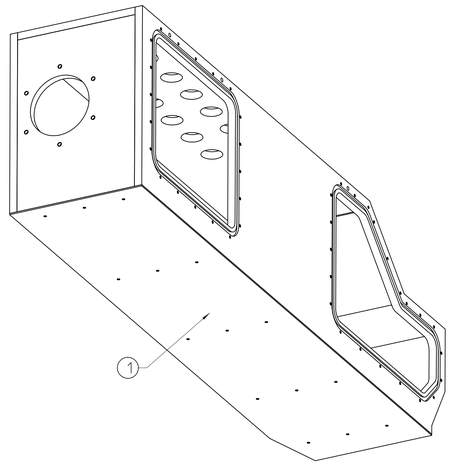

1. FIVE(5) Φ.250"+.010/-.000 HOLES ARE FOR SURVEY CHECKING BALL TO ALIGN CHAMBER. THREE(3) OF THE FIVE(5) ARE ON BEAM CENTER.

REQD	ITEM	PART NO.	DESCRIPTION
-	-	-	-
-	-	-	-
1	10	26D175	CHAMBER ANGLED SIDE PLATE
1	9	26D174	CHAMBER EXIT PLATE LOWER
1	8	26D173	CHAMBER EXIT PLATE UPPER
1	7	26D172	CHAMBER SHORT TOP PLATE
1	6	26D171	CHAMBER ANGLED TOP PLATE
1	5	26D170	CHAMBER FRONT PLATE
1	4	26D169	CHAMBER SHORT SIDE PLATE
1	3	26D168	CHAMBER LONG SIDE PLATE
1	2	26D167	CHAMBER LONG TOP PLATE
1	1	26D166	CHAMBER BASE PLATE

REV	AUTHOR	APPROVER	DATE	CHANGE DESCRIPTION
B	cummings	plate	01-30-06	
A	cummings	plate	01-27-06	INITIAL REVISION

UNLESS OTHERWISE SPECIFIED
TOLERANCES: .X ± .06 .XX ± .03 .XXX ± .015; FRACTIONS: ± -/--; ANGLES: ± 5°/INCH; MACH. SURFS.: 125 ✓ OR BETTER
REF: ASME Y14.5M-1994, THREADS ARE CLASS 2
BREAK EDGES .016 MAX. ON MACHINED WORK
REMOVE BURRS, WELD SPLATTER & LOOSE SCALE

PROJECT NAME: Advanced Light Source
UNIQUE NUMBER: AL-0023-3217
DO NOT SCALE PRINT — SCALE: 1 : 4
CATEGORY CODE: AL6000
THIRD ANGLE PROJECTION

ERNEST ORLANDO LAWRENCE
BERKELEY NATIONAL LABORATORY
UNIVERSITY OF CALIFORNIA

ALS - BEND MAGNET BEAMLINES
BEND MAGNET BEAM LINES - GENERAL
CHAMBER WELDMENT ASSEMBLY

1 SHEET OF 1 — SIZE: E — DWG NO: 26D165 — REV B

Officially Released to the LBNL Document Control Center
Released: January 30th, 2006 DCC Auth Key: 3LVMTS7AXL
Downloaded by: David W Plate at January 30, 2006 09:26:53
AUTO GENERATED PDF
Jan 30 2006 7:47:41 PST