ITEM	PART NO	REQD	DESCRIPTION	MATERIAL
3	25M852	1	INVAR ROD, LONG	INVAR 36
2	-	2	JAM NUT, 1/2-20 UNF, 5/16 THICK	SS
1	-	2	1/2" ROD END, RADIAL BEARING CO. RF-8	-

NOTES: (UNLESS OTHERWISE SPECIFIED)

1. THIS IS A CRYOGENIC VACUUM COMPONENT.
2. CLEANING PROCEDURE : PER VENDOR SPECIFICATION WITH LBNL APPROVAL.
3. LUBRICANT IN ROD END MUST BE VACUUM COMPATIBLE AND IS SUBJECT TO LBNL APPROVAL.
4. DIMENSIONS AND TOLERANCING PER ANSI Y14.5M-1982. UNITS ARE IN INCHES [mm] UNLESS OTHERWISE SPECIFIED.

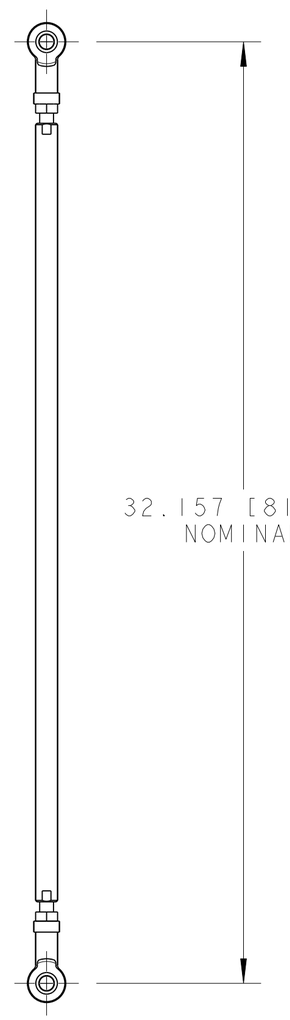

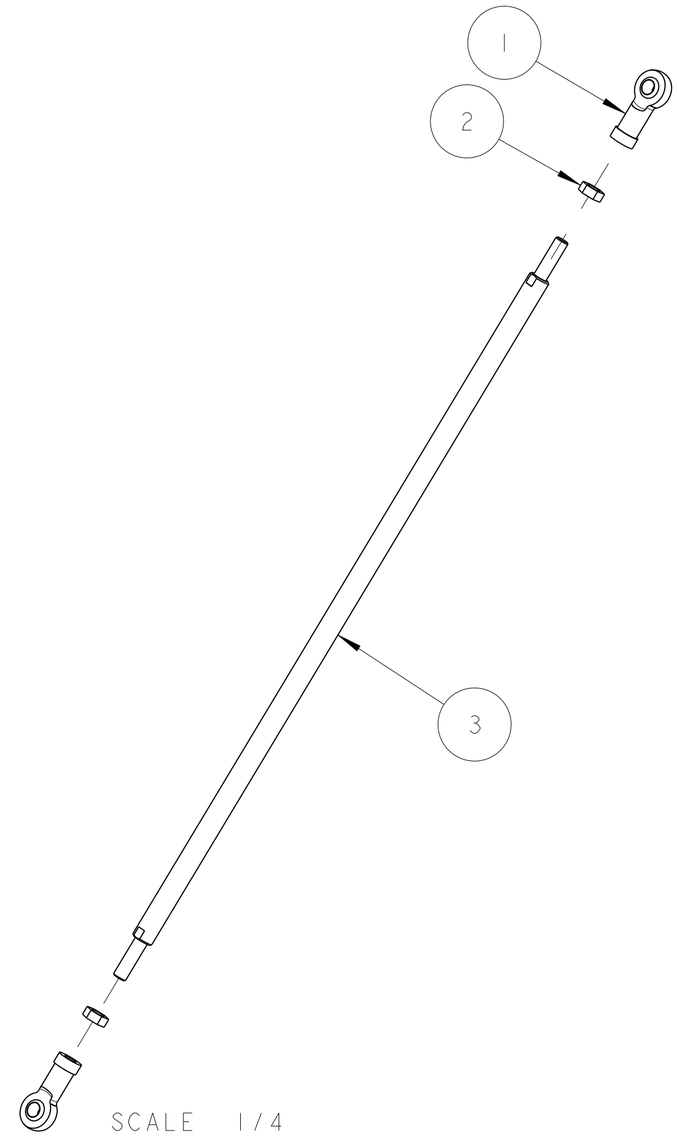

SCALE 1/4

MAXIMUM STRUT LENGTH
32.842
[834.19]
MINIMUM STRUT LENGTH
31.468
[799.29]

REV	DWG	CHK	ZONE	DATE	CHANGES
A	AH	DPO		9/13/02	INITIAL RELEASE

UNLESS OTHERWISE SPECIFIED

TOLERANCES		
	X.X ± 0.1	FRAC. ± 1/64
	X.XX ± 0.03	Angles ± 1.00°
	X.XXX ± 0.010	FINISH 125 (μin)

DO NOT SCALE PRINT

THREADS ARE CLASS 2
CHAMFER ENDS OF ALL SCREW TREADS 30°
CUT ROUND, 1.5 THREAD RELIEF ON MACHINED THREADS
BREAK EDGES .016 MAX. ON MACHINED WORK
REMOVE BURRS, WELD SPLATTER & LOOSE SCALE
IN ACCORDANCE WITH ASME Y14.5M & B46.1

SHOP ORDERS

SER NO.	-		
ACCT NO.	NO. REQD	DATE ISSD	-
DEL TO		DATE REQD	-
SURFACE TREATMT	-		
IDENT METHOD	TAG		
PROJECT NUMBER	N/A		
PROJECT NAME	N/A		
DWG BY	S.Bartlett	DATE	01-Aug-02
CHK BY	S.VIROSTEK	DATE	03-SER-02
APR BY	D.OSHATZ	DATE	03-SEP-02

ERNEST ORLANDO LAWRENCE BERKELEY NATIONAL LABORATORY
UNIVERSITY OF CALIFORNIA - BERKELEY

LHC IR FEEDBOX
CRYOGENICS
LONG VERTICAL STRUT ROD ASSEMBLY

MICROFILMED:	DWG. TYPE	SHOWN ON	SCALE: ~7/64	DO NOT SCALE PRINTS
	ASSEM	-	SHEET 1 OF 1	
PATENT CLEAR:	DESIGN ACCT. NO.	CATEGORY CODE	DWG. NO. 25M8503	SIZE / REV. A
	Z5LCC2	LH2003		

DWG. NO. 25M8503 SIZE A REV. SH. 1

Dwg. File: 25M850 Model File: 25M850