| DWG. NO. | SIZE | REV. | SH. |
|---|---|---|---|
| 2518934 | | A | 1 |

| ITEM | PART NO | REQD | DESCRIPTION | MATERIAL |
|---|---|---|---|---|
| 3 | 251897 | 3 | BUS DUCT SPACER, 2 CONDUIT | SS 304L |
| 2 | - | 1 | TUBE | SS 304L |
| 1 | - | 1 | PLATE | SS 304L |

NOTES: (UNLESS OTHERWISE SPECIFIED)

1. THIS IS A CRYOGENIC VACUUM COMPONENT.
2. WELDING PROCEDURE: PER VENDOR SPECIFICATION WITH LBNL APPROVAL.
3. CLEANING PROCEDURE : PER VENDOR SPECIFICATION WITH LBNL APPROVAL.
4. PACKAGING AND STORAGE PROCEDURE OF THE COMPONENTS: PER VENDOR SPCIFICATION WITH LBNL APPROVAL.
5. DIMENSIONS AND TOLERANCING PER ANSI Y14.5M-1982. UNITS ARE IN INCHES [mm] UNLESS OTHERWISE SPECIFIED.
6. USE OF SULFUR OR SILICONE BEARING OILS, LUBRICANTS, OR COOLANTS ARE STRICTLY PROHIBITED.
7. USE OF RESIN OR RUBBER BONDED ABRASIVES UNDER POWER IS STRICTLY PROHIBITED. USE VITREOUS BONDED ABRASIVES ONLY.
8. VENDOR SUGGESTED CHANGES TO WELD PREPS; SUBECT TO LBNL APPROVAL.
9. VENDOR SUGGESTED CHANGES TO TOLERANCES TO FACILITATE FABRICATION OR ASSEMBLY; SUBECT TO LBNL APPROVAL.
10. REMOVE ALL THE BURRS AND REAM THE ENDS FOR CIRCULARITY AND CLEAN ENDS.
11. TUBE END SURFACE MUST BE PERPENDICULAR TO THE TUBE AXIS WITHIN +/-.010.

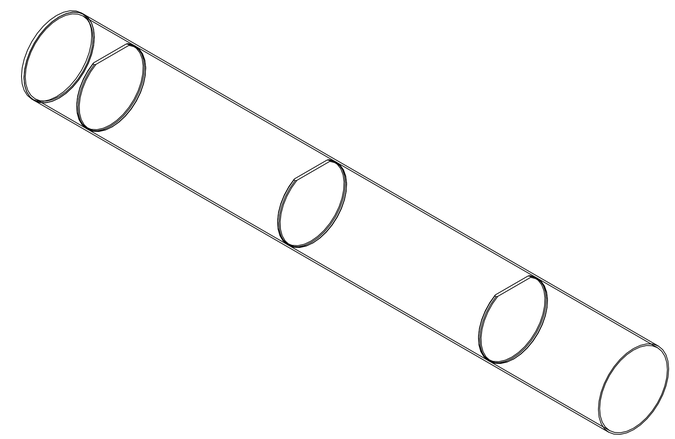

SCALE 3/8

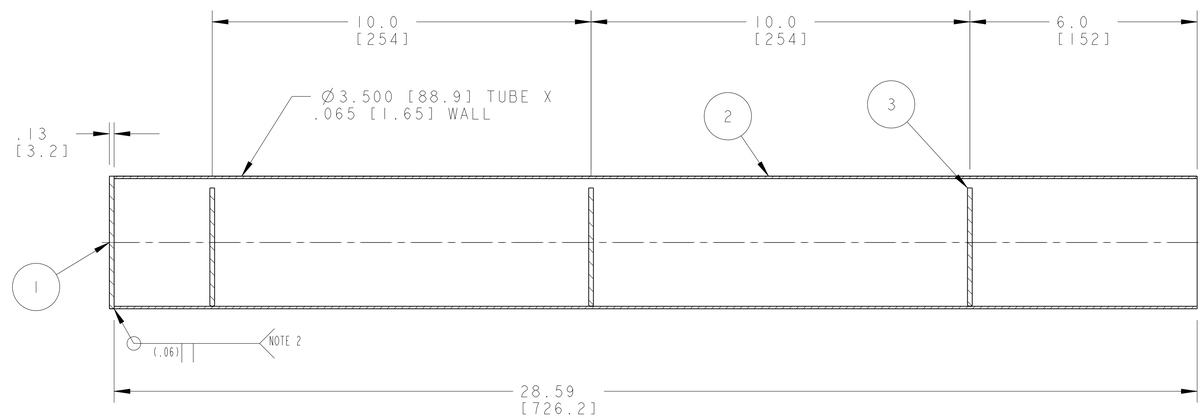


SECTION A-A

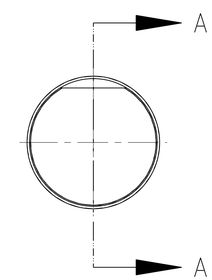


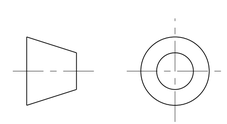

THIRD ANGLE PROJECTION

| REV | DWG | CHK | ZONE | DATE | CHANGES |
|---|---|---|---|---|---|
| A | ARH | DPO | | 9/19/02 | INITIAL RELEASE |

UNLESS OTHERWISE SPECIFIED

| TOLERANCES | | |
|---|---|---|
| | X.X ± 0.1 | FRAC. ± 1/64 |
| | X.XX ± 0.03 | Angles ± 1.00° |
| | X.XXX ± 0.010 | FINISH 125 (μin) |

DO NOT SCALE PRINT

THREADS ARE CLASS 2
CHAMFER ENDS OF ALL SCREW TREADS 30°
CUT ROUND, 1.5 THREAD RELIEF ON MACHINED THREADS
BREAK EDGES .016 MAX. ON MACHINED WORK
REMOVE BURRS, WELD SPLATTER & LOOSE SCALE
IN ACCORDANCE WITH ASME Y14.5M & B46.1

SHOP ORDERS

| | | | |
|---|---|---|---|
| ACCT NO. | NO. REQD | SER NO. | - |
| DEL TO | | DATE ISSD | - |
| SURFACE TREATMT | - | DATE REQD | - |
| IDENT METHOD | TAG | | |
| PROJECT NUMBER | N/A | | |
| PROJECT NAME | N/A | | |
| DWG BY | R LA MANTIA | DATE | 18-Jan-02 |
| CHK BY | Jon Zbasnik | DATE | 31-JUL-02 |
| APR BY | Jon Zbasnik | DATE | 31-JUL-02 |

ERNEST ORLANDO LAWRENCE
BERKELEY NATIONAL LABORATORY
UNIVERSITY OF CALIFORNIA - BERKELEY

LHC IR FEEDBOX
CRYOGENICS
DI BUS DUCT EXTENSION

| MICROFILMED: | DWG. TYPE | SHOWN ON | SCALE: 1/2 | DO NOT SCALE PRINTS |
|---|---|---|---|---|
| | ASSEM | - | SHEET 1 OF 1 | |
| PATENT CLEAR: | DESIGN ACCT. NO. | CATEGORY CODE | DWG. NO. 2518934 | SIZE / REV. A |
| | Z5LCE2 | LH2003 | | |

Dwg. File: 251897 Model File: 251897