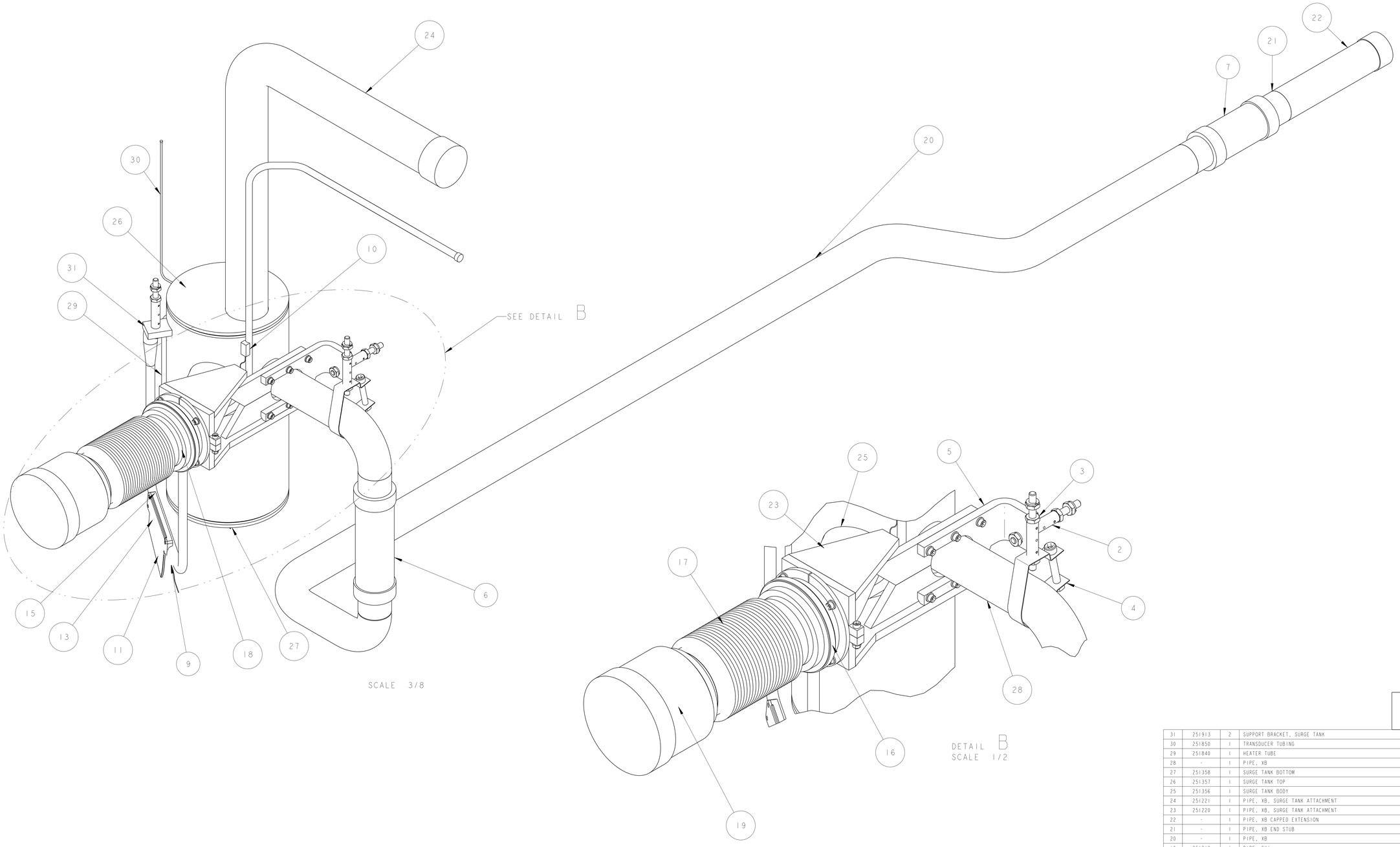


| ITEM | PART NO | REQD | DESCRIPTION | MATERIAL |
|---|---|---|---|---|
| 31 | 251913 | 2 | SUPPORT BRACKET, SURGE TANK | SS 304L |
| 30 | 251850 | 1 | TRANSDUCER TUBING | SS 304L |
| 29 | 251840 | 1 | HEATER TUBE | SS 304L |
| 28 | - | 1 | PIPE, XB | SS 304L |
| 27 | 251358 | 1 | SURGE TANK BOTTOM | SS 304L |
| 26 | 251357 | 1 | SURGE TANK TOP | SS 304L |
| 25 | 251356 | 1 | SURGE TANK BODY | SS 304L |
| 24 | 251221 | 1 | PIPE, XB, SURGE TANK ATTACHMENT | SS 304L |
| 23 | 251220 | 1 | PIPE, XB, SURGE TANK ATTACHMENT | SS 304L |
| 22 | - | 1 | PIPE, XB CAPPED EXTENSION | SS 304L |
| 21 | - | 1 | PIPE, XB END STUB | SS 304L |
| 20 | - | 1 | PIPE, XB | SS 304L |
| 19 | 251210 | 1 | PIPE, CY1 | SS 304L |
| 18 | 25M862 | 1 | WELD BRACKET | SS 304L |
| 17 | 251314 | 1 | BELLOWS, FNAL# 5520-MD-390065 | SS 300 SERIES |
| 16 | 251306 | 1 | FLANGE, FNAL# 5520-MC-390032 | SS 300 SERIES |
| 15 | 25M877 | 1 | CLAMP BASE PLATE, 5/8 TUBE X 5.00 " | OFHC C101 |
| 14 | 251426 | 1 | CLAMP BASE PLATE | OFHC C101 |
| 13 | 25M814 | 1 | CLAMP COVER 4" | COPPER, OFHC, C101 |
| 12 | 25M813 | 1 | CLAMP COVER 1" | COPPER, OFHC, C101 |
| 11 | - | 1 | STANDARD BRAIDED COPPER CABLE 4" | - |
| 10 | - | 1 | CERNOX, TEMP SENSOR | - |
| 9 | - | 1 | CERNOX, TEMP SENSOR | - |
| 8 | - | 1 | CERNOX, TEMP SENSOR | - |
| 7 | - | 1 | BRAIDED FLEXHOSE,2" ID X 4.25" LL | - |
| 6 | - | 1 | 2" ID FLEXHOSE X 7" LL | - |
| 5 | 25M863 | 1 | XB BELLOWS SUPPORT BRACKET | - |
| 4 | 25M811 | 1 | PIPE HANGER, SURGE TANK | - |
| 3 | 25M810 | 1 | THRUST SUPPORT WITH THERMAL BREAK | - |
| 2 | 25M810 | 3 | THRUST SUPPORT WITH THERMAL BREAK | - |
| 1 | - | 1 | WELD RING, ID 134mm, FNAL SUPPLIED | - |

NOTES: (UNLESS OTHERWISE SPECIFIED)

1. THIS IS A CRYOGENIC VACUUM COMPONENT.
2. WELDING PROCEDURE: PER VENDOR SPECIFICATION WITH LBNL APPROVAL.
3. CLEANING PROCEDURE : PER VENDOR SPECIFICATION WITH LBNL APPROVAL.
4. PACKAGING AND STORAGE PROCEDURE OF THE COMPONENTS: PER VENDOR SPECIFICATION WITH LBNL APPROVAL.
5. DIMENSIONS AND TOLERANCING PER ANSI Y14.5M-1982. UNITS ARE IN INCHES [mm] UNLESS OTHERWISE SPECIFIED.
6. USE OF SULFUR OR SILICONE BEARING OILS, LUBRICANTS, OR COOLANTS ARE STRICTLY PROHIBITED.
7. USE OF RESIN OR RUBBER BONDED ABRASIVES UNDER POWER IS STRICTLY PROHIBITED. USE VITREOUS BONDED ABRASIVES ONLY.
8. VENDOR SUGGESTED CHANGES TO WELD PREPS; SUBJECT TO LBNL APPROVAL.
9. FITTINGS MAY BE USED IN PLACE OF BENDS; SUBJECT TO LBNL APPROVAL.
10. VENDOR SUGGESTED CHANGES TO TOLERANCES TO FACILITATE FABRICATION OR ASSEMBLY; SUBECT TO LBNL APPROVAL.
11. REMOVE ALL THE BURRS AND REAM THE ENDS FOR CIRCULARITY AND CLEAN ENDS.
12. TUBE END SURFACE MUST BE PERPENDICULAR TO THE TUBE AXIS WITHIN +/-.010.
13. PERFORM ACCEPTANCE TESTS PER SECTION 3.2 OF LBNL SPECIFICATION M856.
14. A MARK DESIGNATING THE INSTALLED LENGTH WILL BE UTILIZED DURING FINAL INSTALLATION OF THE FEEDBOX ASSEMBLY. MARK, SCRIBE OR ETCH THIS LOCATION IN A PERMANENT MANNER, SUBJECT TO LBNL APPROVAL, TO AN ACCURACY OF ±0.063".
15. PROVIDE A MINIMUM LENGTH OF 4.0" OF STRAIGHT, SMOOTH PIPE ON THE INDICATED SIDE OF THE INSTALLED LENGTH MARK FOR PIPE WELDING DURING FINAL INSTALLATION OF THE FEEDBOX ASSEMBLY.
16. PIPE MUST BE STRAIGHT AND SMOOTH (NO BUMPS) FOR 0.5" ON EITHER SIDE OF THE CENTER-PLANE OF THE SUPPORT.
17. CAP BOTH ENDS OF PIPE AFTER ACCEPTANCE TESTS PER SECTION 3.2 OF LBNL SPECIFICATION M856.
18. INSTALL TEMPERATURE SENSOR PER LHC SPECIFICATION LHC-QIT-ES-0002. SENSOR TO BE PROVIDED BY LBNL.

THIRD ANGLE PROJECTION

| REV | DWG | CHK | ZONE | DATE | CHANGES |
|---|---|---|---|---|---|
| A | ARH | DPO | | 9-16-02 | INITIAL RELEASE |

UNLESS OTHERWISE SPECIFIED
TOLERANCES: X.X ± 0.1; FRAC. ± 1/64; X.XX ± 0.03; Angles ± 1.00°; X.XXX ± 0.010; FINISH 125 √
DO NOT SCALE PRINT
THREADS ARE CLASS 2
CHAMFER ENDS OF ALL SCREW THREADS 30°
CUT ROUND, 1.5 THREAD RELIEF ON MACHINED THREADS
BREAK EDGES .016 MAX. ON MACHINED WORK
REMOVE BURRS, WELD SPLATTER & LOOSE SCALE
IN ACCORDANCE WITH ASME Y14.5M & ENG.1

SHOP ORDERS
ACCT NO.: NO. REQD:
DEL TO: DATE ISSUED: DATE REQD:
SURFACE TREATMENT:
IDENT METHOD: TAG
PROJECT NUMBER: N/A
PROJECT NAME: N/A
DWG BY: KNOLLS DATE 07-Dec-01
CHK BY: Jon Zbasnik DATE 4-02-02
APR BY: Jon Zbasnik DATE 4-02-02

ERNEST ORLANDO LAWRENCE BERKELEY NATIONAL LABORATORY
UNIVERSITY OF CALIFORNIA - BERKELEY

LHC IR FEEDBOX
CRYOGENICS
PIPE, XB

MICROFILMED: | DWG. TYPE: ASSEM | SHOWN ON: - | SCALE: 1/4 | DO NOT SCALE PRINT
PATENT CLEAR: | DESIGN ACCT. NO.: Z5LCE2 | CATEGORY CODE: LH2003 | DWG. NO.: 2518906 | SIZE: A | REV.: A
SHEET 1 OF 3

DWG. NO. 2518906 REV. A SHT. 1

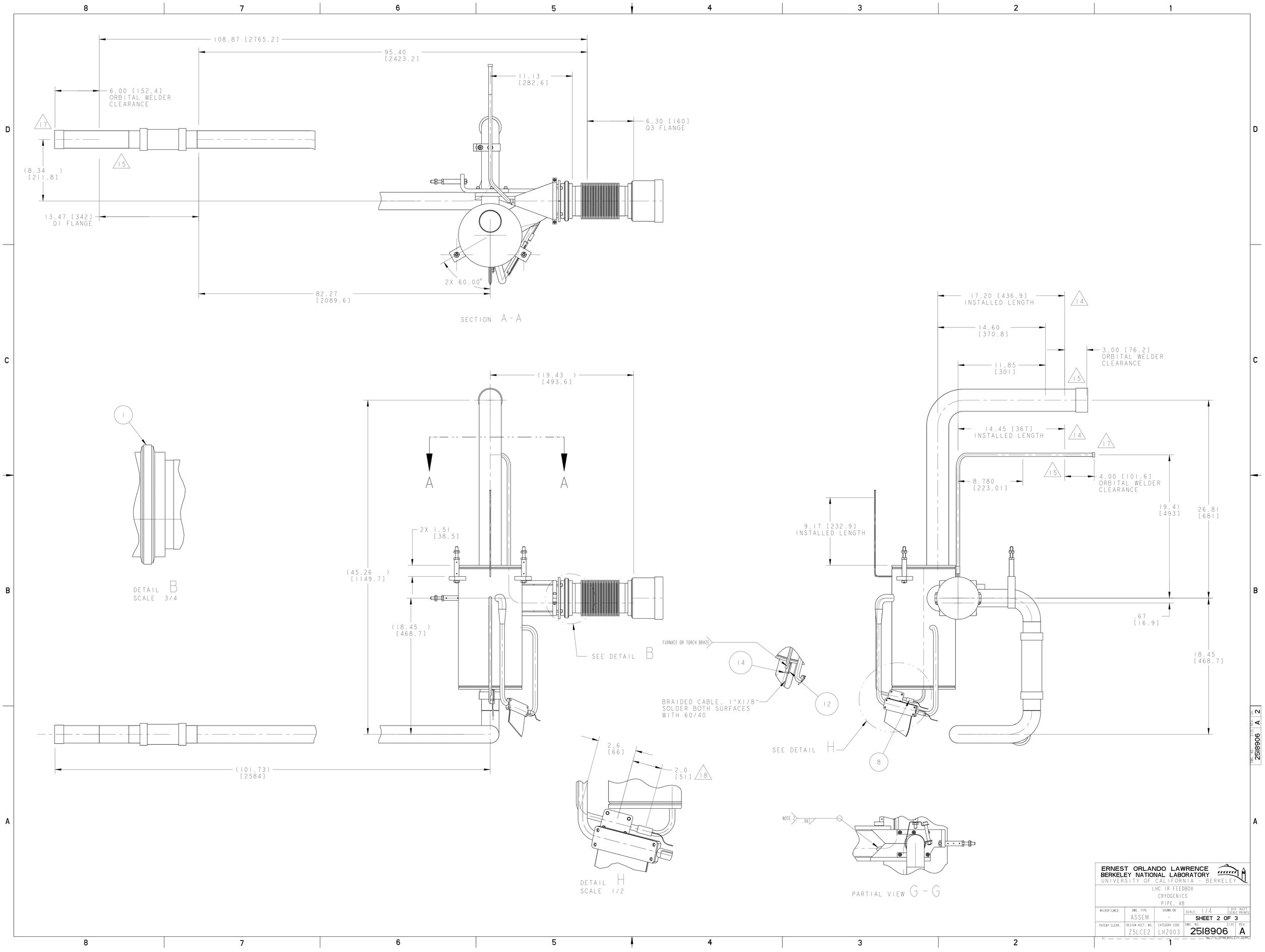


ERNEST ORLANDO LAWRENCE BERKELEY NATIONAL LABORATORY
UNIVERSITY OF CALIFORNIA - BERKELEY

LHC IR FEEDBOX
CRYOGENICS
PIPE, XB

| MICROFILMED: | DWG. TYPE | SHOWN ON | SCALE: 1/4 | DO NOT SCALE PRINTS |
|---|---|---|---|---|
| | ASSEM | - | SHEET 2 OF 3 | |
| PATENT CLEAR: | DESIGN ACCT. NO. | CATEGORY CODE | DWG. NO. | SIZE / REV. |
| | Z5LCE2 | LH2003 | 2518906 | A |

DWG. NO. 2518906 SIZE A REV. 2

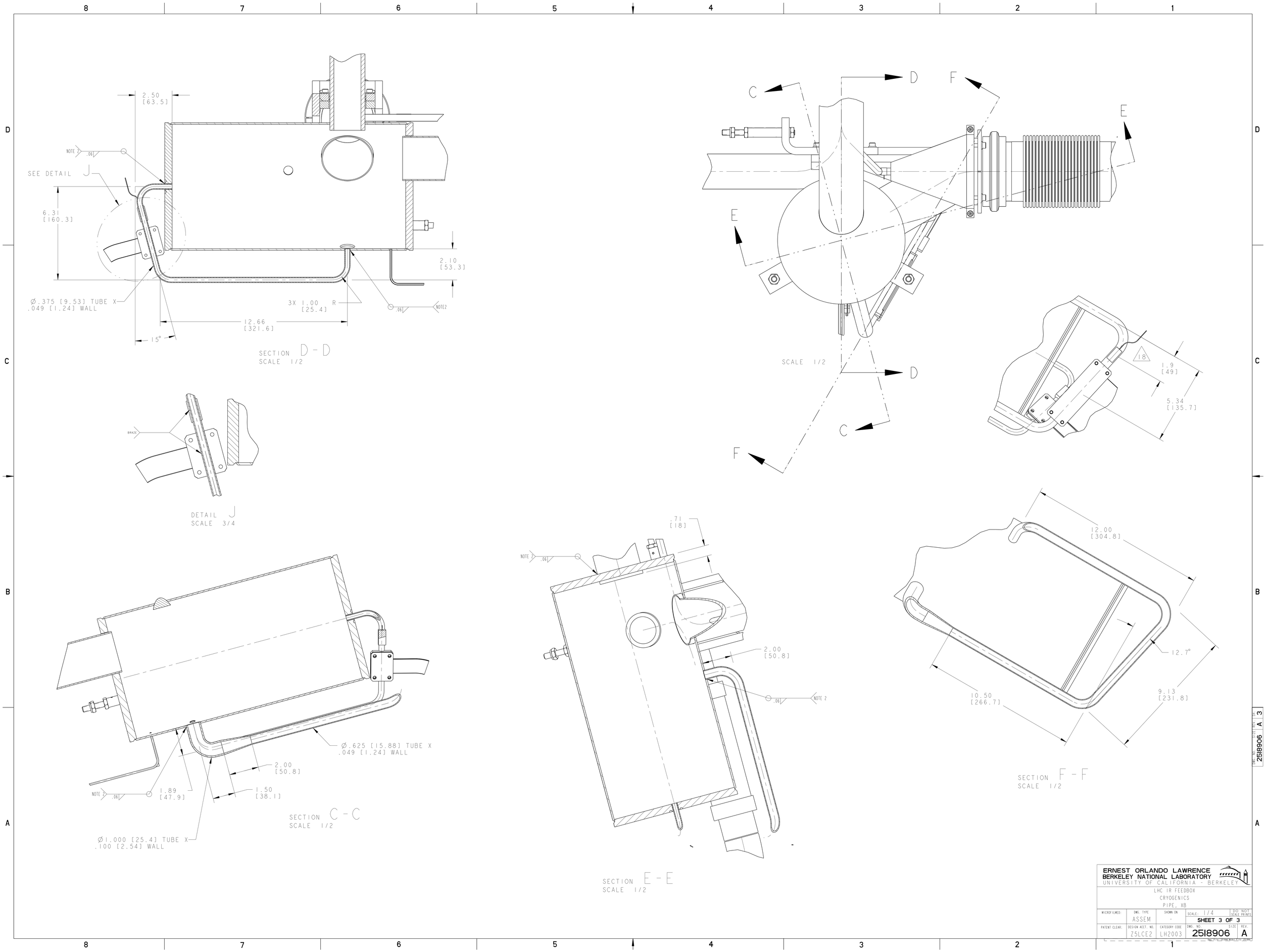


ERNEST ORLANDO LAWRENCE BERKELEY NATIONAL LABORATORY
UNIVERSITY OF CALIFORNIA - BERKELEY

LHC IR FEEDBOX
CRYOGENICS
PIPE, XB

| MICROFILMED: | DWG. TYPE | SHOWN ON | SCALE: 1/4 | DO NOT SCALE PRINTS |
|---|---|---|---|---|
| | ASSEM | - | SHEET 3 OF 3 | |
| PATENT CLEAR: | DESIGN ACCT. NO. | CATEGORY CODE | DWG. NO. | SIZE / REV. |
| | Z5LCE2 | LH2003 | 2518906 | A |

DWG. NO. 2518906 SIZE A REV. 3