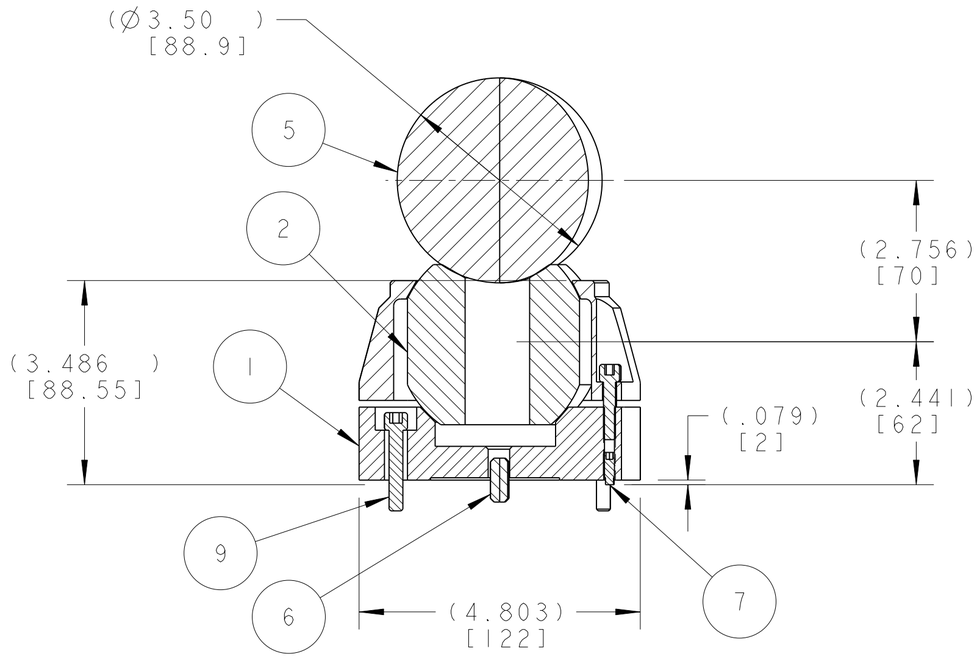

SECTION A - A

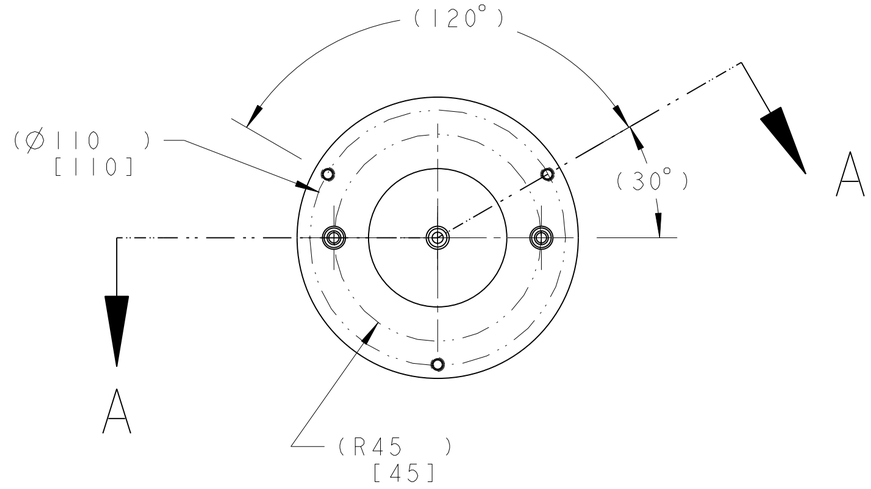

NOTES: UNLESS OTHERWISE SPECIFIED,

1. DIMENSIONS AND TOLERANCING PER ANSI Y14.5M-1982 UNITS ARE IN INCHES UNLESS OTHERWISE SPECIFIED.

6. DIMENSIONS SHOWN ARE FOR REFERENCE ONLY. REFER TO VENDOR DRAWING NO. LHCGIMSA00012 FOR MORE INFORMATION.

7. ESTIMATED WEIGHT = 23 LBS

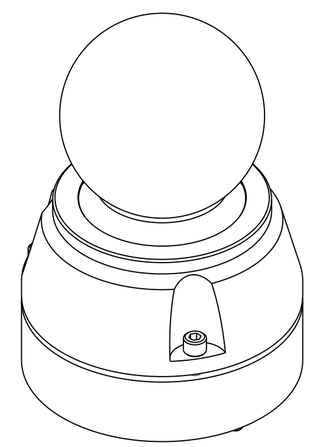

ITEM	PART NO	REQD	DESCRIPTION	MATERIAL
9	-	2	M6 X 35	-
8	-	3	M6 X 25	-
7	-	3	M6 X 16 SH SET SCREW, DOG POINT	-
6	-	1	DOWEL	-
5	-	1	HOBSON BALL 3.5" DIA	-
4	-	1	REF SOCKET COVER LHCGIMSA00092	-
2	-	1	REF SOCKET SPHERE LHCGIMSA00043A	-
1	-	1	REF SOCKET CUP LHCGIMSA00032A	-

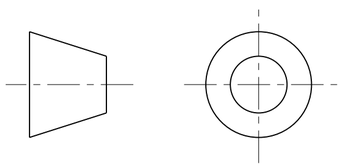

THIRD ANGLE PROJECTION

REV	DWG	CHK	ZONE	DATE	CHANGES
A	ARH	DPO		09-14-02	INITIAL RELEASE

UNLESS OTHERWISE SPECIFIED

TOLERANCES		
	X.X ± 0.1	FRAC. ± 1/64
	X.XX ± 0.03	Angles ± 1.00°
	X.XXX ± 0.010	FINISH 125 (µin)

DO NOT SCALE PRINT

THREADS ARE CLASS 2
CHAMFER ENDS OF ALL SCREW TREADS 30°
CUT ROUND, 1.5 THREAD RELIEF ON MACHINED THREADS
BREAK EDGES .016 MAX. ON MACHINED WORK
REMOVE BURRS, WELD SPLATTER & LOOSE SCALE
IN ACCORDANCE WITH ASME Y14.5M & B46.1

SHOP ORDERS

SER NO.	-		
ACCT NO.		NO. REQD	DATE ISSD -
DEL TO			DATE REQD -
SURFACE TREATMT	-		
IDENT METHOD	TAG		
PROJECT NUMBER	N/A		
PROJECT NAME	N/A		
DWG BY	A. ZACHOSZCZ		DATE 12-Oct-01
CHK BY	Jon Zbasnik		DATE 04-Feb-02
APR BY	Jon Zbasnik		DATE 04-Feb-02

ERNEST ORLANDO LAWRENCE BERKELEY NATIONAL LABORATORY
UNIVERSITY OF CALIFORNIA - BERKELEY

LHC IR FEEDBOX
MAJOR ASSEMBLY
TOOLING BALL, LHCGIMSA00092

MICROFILMED:	DWG. TYPE	SHOWN ON	SCALE: 1/2	DO NOT SCALE PRINTS
	ASSEM	.	SHEET 1 OF 1	
PATENT CLEAR:	DESIGN ACCT. NO.	CATEGORY CODE	DWG. NO.	SIZE / REV.
	Z5LCE2	LH2001	2518683	A

Dwg. File: 251868 Model File: 251868

Rev. 17-Sep-2000 J. L. Gabriel

DWG. NO. 2518683 SIZE A REV. 1 SH.