DESCRIPTION	MATERIAL	MAT. LOCATION
-	SS 304L	-

NOTES:

1. THIS IS A CRYOGENIC VACUUM COMPONENT.
2. MATERIAL: STAINLESS STEEL TUBING, SEAMLESS, GRADE TP 316L PER ASTM A269, TUBE SIZE 5/8" X .065 WALL

   ALTERNATE MATERIAL: STAINLESS STEEL SHEET, TYPE 316L PER ASTM A240, SHEET 16GA (.059)
3. WELDING PROCEDURE: PER VENDOR SPECIFICATION WITH LBNL APPROVAL.
4. CLEANING PROCEDURE : PER VENDOR SPECIFICATION WITH LBNL APPROVAL.
5. PACKAGING AND STORAGE PROCEDURE OF THE COMPONENTS PER VENDOR SPCIFICATION WITH LBNL APPROVAL.
6. DIMENSIONS AND TOLERANCING PER ANSI Y14.5M-1982. UNITS ARE IN INCHES [mm] UNLESS OTHERWISE SPECIFIED.
7. USE OF SULFUR OR SILICONE BEARING OILS, LUBRICANTS, OR COOLANTS ARE STRICTLY PROHIBITED.
8. USE OF RESIN OR RUBBER BONDED ABRASIVES UNDER POWER IS STRICTLY PROHIBITED. USE VITREOUS BONDED ABRASIVES ONLY.
9. VENDOR SUGGESTED CHANGES TO TOLERANCES TO FACILITATE FABRICATION OR ASSEMBLY; SUBECT TO LBNL APPROVAL.
10. REMOVE ALL THE BURRS AND REAM THE ENDS FOR CIRCULARITY AND CLEAN ENDS.
11. TUBE END SURFACE MUST BE PERPENDICULAR TO THE TUBE AXIS WITHIN +/-.010.
12. THIS DIAMETER SHALL CONFORM TO STANDARD TUBE SIZE AND TOLERANCES PER ASTM A269, WHEN ALTERNATE MATERIAL IS USED

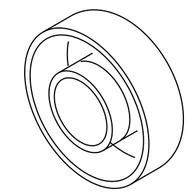

SCALE 1/1

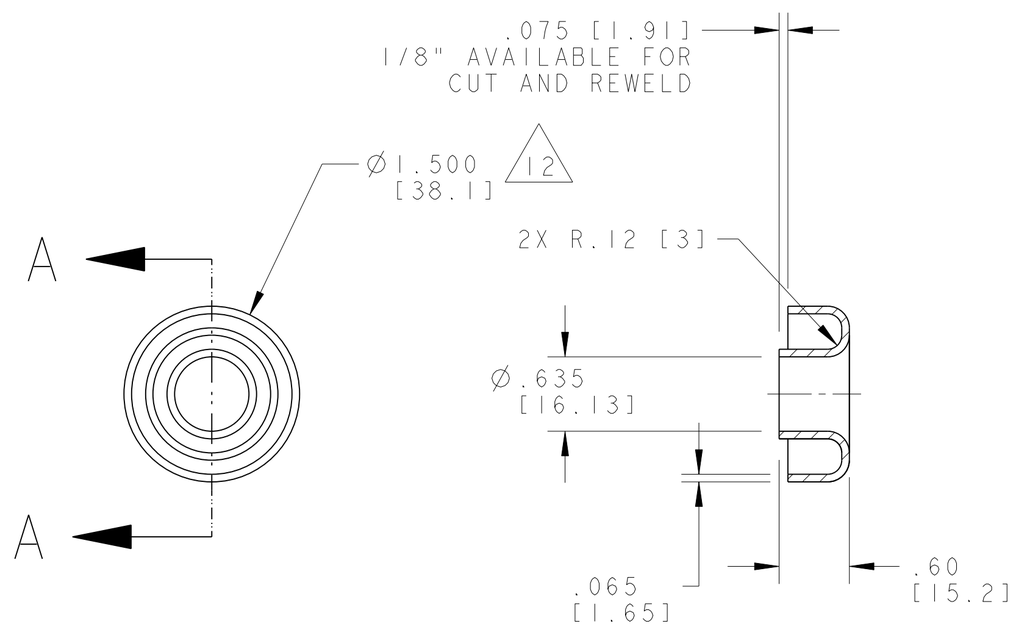

SECTION A - A

REV	DWG	CHK	ZONE	DATE	CHANGES
A	ARH	DPO		9/16/02	INITIAL RELEASE

UNLESS OTHERWISE SPECIFIED

TOLERANCES		
	X.X ± 0.1	FRAC. ± 1/64
	X.XX ± 0.03	Angles ± 1.00°
	X.XXX ± 0.010	FINISH 125 (μin)

DO NOT SCALE PRINT

THREADS ARE CLASS 2
CHAMFER ENDS OF ALL SCREW TREADS 30°
CUT ROUND, 1.5 THREAD RELIEF ON MACHINED THREADS
BREAK EDGES .016 MAX. ON MACHINED WORK
REMOVE BURRS, WELD SPLATTER & LOOSE SCALE
IN ACCORDANCE WITH ASME Y14.5M & B46.1

SHOP ORDERS

ACCT NO.	NO. REQD	SER NO.	-
DEL TO		DATE ISSD	-
SURFACE TREATMT	-	DATE REQD	-
IDENT METHOD	TAG		
PROJECT NUMBER	N/A		
PROJECT NAME	N/A		
DWG BY	KNOLLS	DATE	14-Jun-02
CHK BY	J.ZBASNIK	DATE	16-Sep-02
APR BY	J.ZBASNIK	DATE	16-Sep-02

N/A (logo)

ERNEST ORLANDO LAWRENCE BERKELEY NATIONAL LABORATORY
UNIVERSITY OF CALIFORNIA - BERKELEY

LHC IR FEEDBOX
CRYOGENICS
BELLOWS FLANGE, ROLLED

MICROFILMED:	DWG. TYPE	SHOWN ON	SCALE: 1/1	DO NOT SCALE PRINTS
	PART	-	SHEET 1 OF 1	
PATENT CLEAR:	DESIGN ACCT. NO.	CATEGORY CODE	DWG. NO. 2516443	SIZE / REV. A
	Z5LCE2	LH2003		

DWG. NO. 2516443 SIZE A REV. SH. 1

Dwg. File: 251644 Model File: 251644