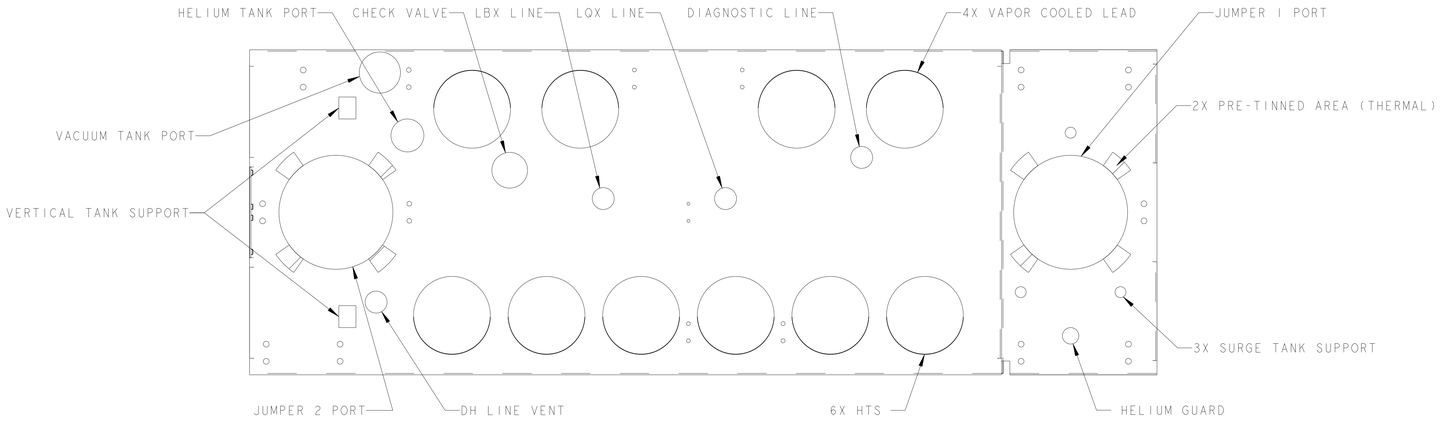

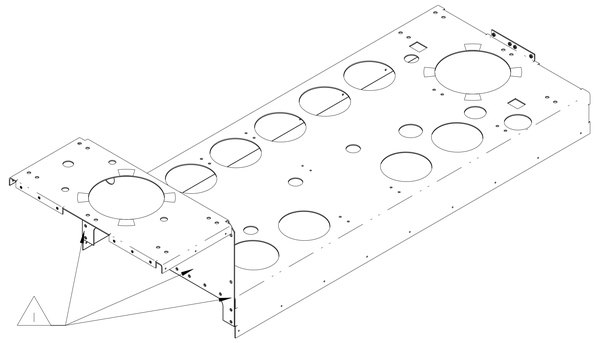

SCALE 1/8

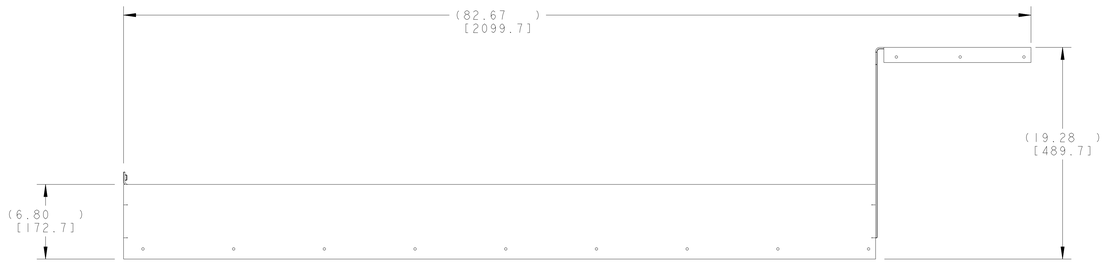

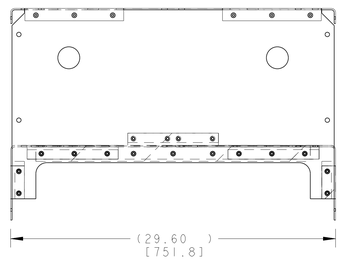

NOTES: (UNLESS OTHERWISE SPECIFIED)

1. ITEMS 1 AND 2 ASSEMBLED WITH FASTENERS IN NEXT ASSEMBLY, THEN RE-FLOW SOLDER FOR THERMAL CONDUCTIVITY.
2. THIS IS A CRYOGENIC VACUUM COMPONENT.
3. WELDING PROCEDURE: PER VENDOR SPECIFICATION WITH LBNL APPROVAL.
4. CLEANING PROCEDURE : PER VENDOR SPECIFICATION WITH LBNL APPROVAL.
5. PACKAGING AND STORAGE PROCEDURE OF THE COMPONENTS: PER VENDOR SPECIFICATION WITH LBNL APPROVAL.
6. DIMENSIONS AND TOLERANCING PER ANSI Y14.5M-1982. UNITS ARE IN INCHES [mm] UNLESS OTHERWISE SPECIFIED.
7. USE OF SULFUR OR SILICONE BEARING OILS, LUBRICANTS, OR COOLANTS ARE STRICTLY PROHIBITED.
8. USE OF RESIN OR RUBBER BONDED ABRASIVES UNDER POWER IS STRICTLY PROHIBITED. USE VITREOUS BONDED ABRASIVES ONLY.
9. PROTECT FINISHED PART BY BAGGING OR SIMILAR METHOD TO PROTECT AND MAINTAIN CLEANLINESS DURING SHIPMENT AND STORAGE.

THIRD ANGLE PROJECTION

REV	DWG	CHK	ZONE	DATE	CHANGES
A	ARH	DPO		09-09-02	INITIAL RELEASE

ITEM	PART NO.	REQD	DESCRIPTION	MATERIAL
2	251071	1	TOP SHIELD, DFBXA/DFBXC/DFBXG	COPPER, OFHC, C101
1	251069	1	TOP COVER, NEGATIVE SD, DFBXC/DFBXG	COPPER, OFHC, C101

UNLESS OTHERWISE SPECIFIED
TOLERANCES: X.X ± 0.1 FRAC. ± 1/64; X.XX ± 0.03 Angles ± 1.00°; X.XXX ± 0.010 FINISH 125 μin
DO NOT SCALE PRINT
THREADS ARE CLASS 2
CHAMFER ENDS OF ALL SCREW THEADS 30°
CUT ROUND, 1.5 THREAD RELIEF ON MACHINED THREADS
BREAK EDGES .016 MAX. ON MACHINED WORK
REMOVE BURRS, WELD SPLATTER & LOOSE SCALE
IN ACCORDANCE WITH ASME Y14.5M & B46.1

SHOP ORDERS
SER NO.
ACCT NO. / NO. REQD
DATE ISSD
SEL TO
DATE REQD
SURFACE TREATMT
IDENT METHOD TAG
PROJECT NUMBER N/A
PROJECT NAME N/A
DWN By R. LA MANTIA DATE 04-Aug-02
CHK By Jon Zbasnik DATE 13-AUG-02
APP By Jon Zbasnik DATE 13-AUG-02

ERNEST ORLANDO LAWRENCE BERKELEY NATIONAL LABORATORY
UNIVERSITY OF CALIFORNIA - BERKELEY

LHC IR FEEDBOX
CRYOGENICS
THERMAL SHIELD ASSY, DFBXC/DFBXG

MICROFILMED: | DWG. TYPE: ASSEM | SHOWN ON: 251137 | SCALE: 3/16 | DO NOT SCALE PRINTS
SHEET 1 OF 1
PATENT CLEAR: | DESIGN ACCT. NO.: Z5LCE2 | CATEGORY CODE: LH2003 | DWG. NO.: 2515906 | SIZE: A | REV.:

DWG. NO. 2515906 SIZE A REV 1