ITEM	PART NO	REQD	DESCRIPTION	MATERIAL
4	251499	1	120 AMP LEAD STIFFENER OUTER RING	NEMA G10
3	251489	1	120 AMP LEAD STIFFENER INNER RING	NEMA G10
2	-	2	SOCKET HEAD CAP SCREW M3x0.5x12mm	-
1	-	2	INSERT, HELICAL, M3x0.5x6mm	-

NOTES: (UNLESS OTHERWISE SPECIFIED)

1. THIS IS A CRYOGENIC VACUUM COMPONENT.
2. CLEANING PROCEDURE : PER VENDOR SPECIFICATION WITH LBNL APPROVAL.
3. PACKAGING AND STORAGE PROCEDURE OF THE COMPONENTS: PER VENDOR SPECIFICATION WITH LBNL APPROVAL.
4. DIMENSIONS AND TOLERANCING PER ANSI Y14.5M-1982. UNITS ARE IN INCHES [mm] UNLESS OTHERWISE SPECIFIED.
5. USE OF SULFUR OR SILICONE BEARING OILS, LUBRICANTS, OR COOLANTS ARE STRICTLY PROHIBITED.
6. USE OF RESIN OR RUBBER BONDED ABRASIVES UNDER POWER IS STRICTLY PROHIBITED. USE VITREOUS BONDED ABRASIVES ONLY.
7. VENDOR SUGGESTED CHANGES TO TOLERANCES TO FACILITATE FABRICATION OR ASSEMBLY; SUBECT TO LBNL APPROVAL.

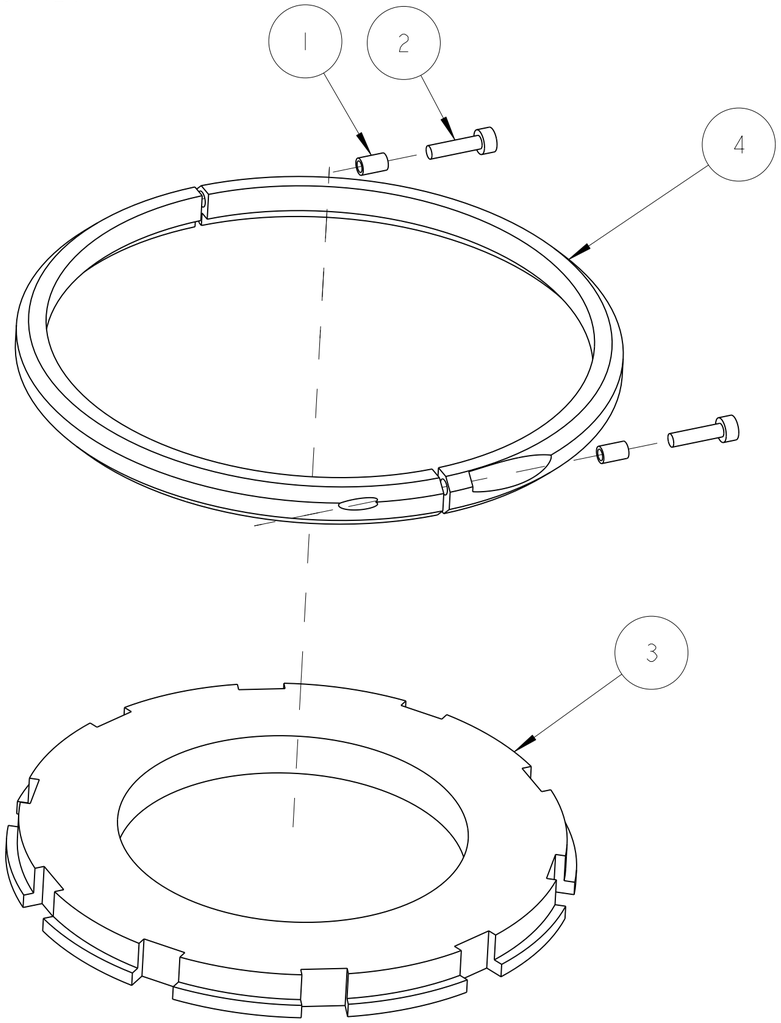

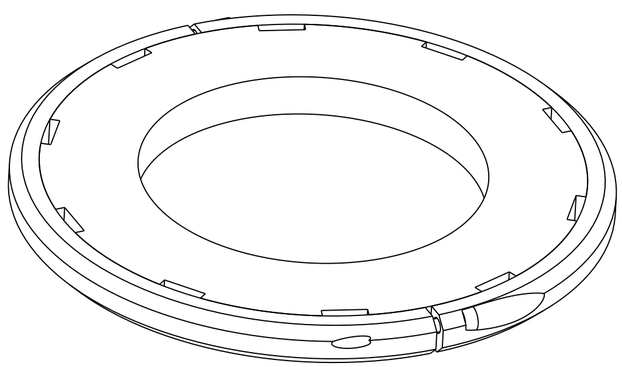

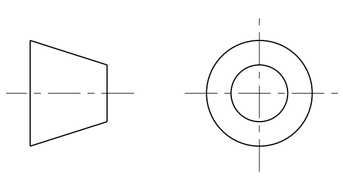

THIRD ANGLE PROJECTION

REV	DWG	CHK	ZONE	DATE	CHANGES
A	ARH	DPO		9/16/02	INITIAL RELEASE

UNLESS OTHERWISE SPECIFIED

TOLERANCES		
	X.X ± 0.1	FRAC. ± 1/64
	X.XX ± 0.03	Angles ± 1.00°
	X.XXX ± 0.010	FINISH 125 √(µin)

DO NOT SCALE PRINT

THREADS ARE CLASS 2
CHAMFER ENDS OF ALL SCREW TREADS 30°
CUT ROUND, 1.5 THREAD RELIEF ON MACHINED THREADS
BREAK EDGES .016 MAX. ON MACHINED WORK
REMOVE BURRS, WELD SPLATTER & LOOSE SCALE
IN ACCORDANCE WITH ASME Y14.5M & B46.1

SHOP ORDERS

ACCT NO. y	NO. REQD y	SER NO. -	
DEL TO		DATE ISSD -	
SURFACE TREATMT -		DATE REQD -	
IDENT METHOD TAG			
PROJECT NUMBER N/A		N/A (logo)	
PROJECT NAME N/A			
DWG BY S.Bartlett		DATE 01-Sep-02	
CHK BY D.OSHATZ		DATE 16-Sep-02	
APR BY D.OSHATZ		DATE 16-Sep-02	

ERNEST ORLANDO LAWRENCE BERKELEY NATIONAL LABORATORY
UNIVERSITY OF CALIFORNIA - BERKELEY

LHC IR FEEDBOX
ELECTRICAL
120 AMP CONDUCTOR STIFFENER ASSEMBLY

MICROFILMED:	DWG. TYPE	SHOWN ON	SCALE: 1/2	DO NOT SCALE PRINTS
	ASSEM	-	SHEET 1 OF 1	
PATENT CLEAR:	DESIGN ACCT. NO.	CATEGORY CODE	DWG. NO.	SIZE / REV.
	Z5LCE3	LH2004	2514963	A

Dwg. File: 251496 Model File: 120A_CONCLAMP_ASSM

Rev. 1/29/2000 J. Oldwell

DWG. NO. 2514963 SIZE A REV. 1 SH.