DESCRIPTION	MATERIAL	MAT. LOCATION
ROUND STOCK, 2.25 DIA. PER ASTM 479	SS 304L	-

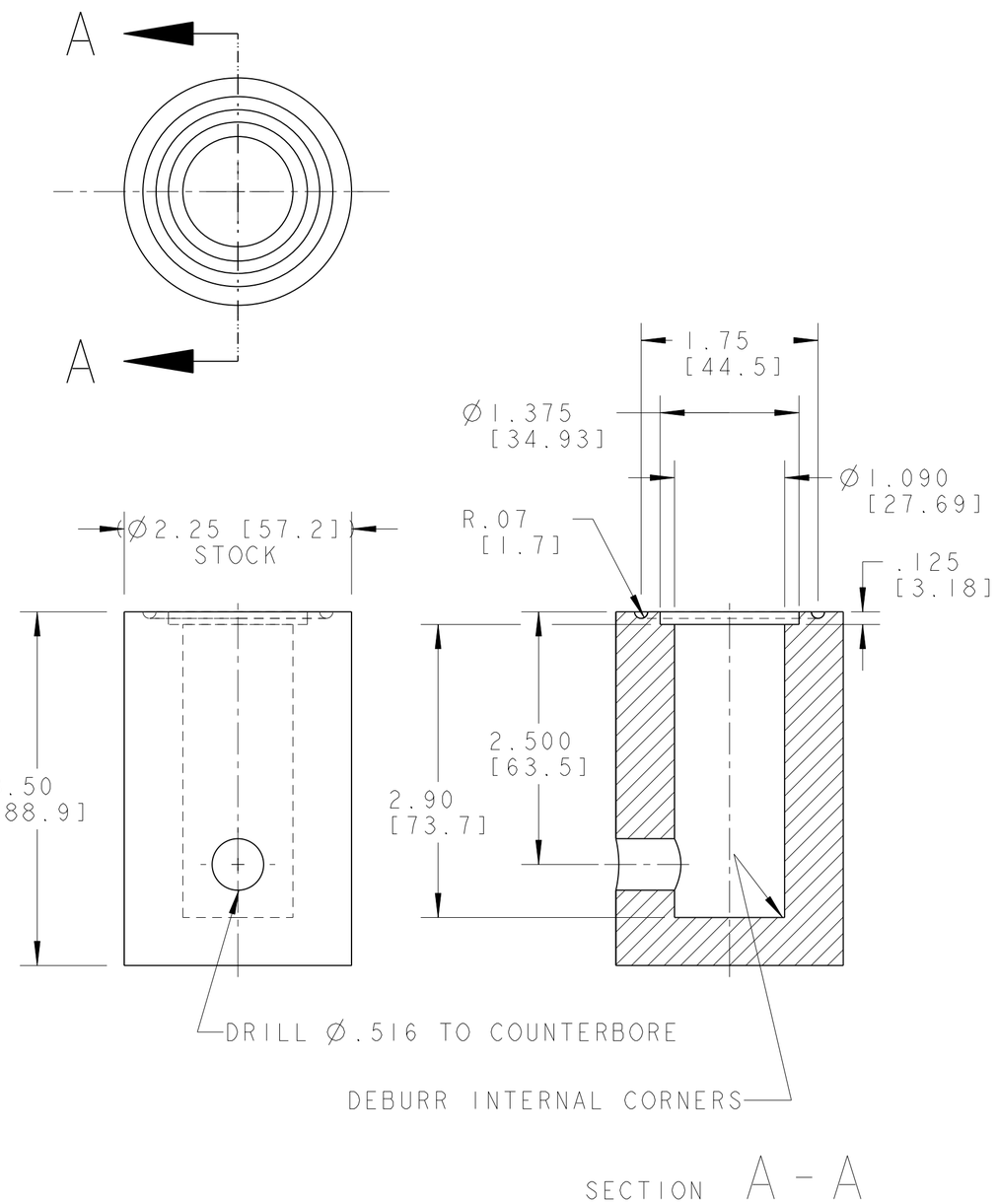

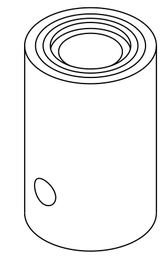

SCALE 1/2

NOTES: (UNLESS OTHERWISE SPECIFIED)

1. THIS IS A CRYOGENIC VACUUM COMPONENT.
2. WELDING PROCEDURE: PER VENDOR SPECIFICATION WITH LBNL APPROVAL.
3. CLEANING PROCEDURE : PER VENDOR SPECIFICATION WITH LBNL APPROVAL.
4. PACKAGING AND STORAGE PROCEDURE OF THE COMPONENTS: PER VENDOR SPECIFICATION WITH LBNL APPROVAL.
5. DIMENSIONS AND TOLERANCING PER ANSI Y14.5M-1982. UNITS ARE IN INCHES [mm] UNLESS OTHERWISE SPECIFIED.
6. USE OF SULFUR OR SILICONE BEARING OILS, LUBRICANTS, OR COOLANTS ARE STRICTLY PROHIBITED.
7. USE OF RESIN OR RUBBER BONDED ABRASIVES UNDER POWER IS STRICTLY PROHIBITED. USE VITREOUS BONDED ABRASIVES ONLY.
8. VENDOR SUGGESTED CHANGES TO WELD PREPS; SUBJECT TO LBNL APPROVAL.
9. VENDOR SUGGESTED CHANGES TO TOLERANCES TO FACILITATE FABRICATION OR ASSEMBLY; SUBECT TO LBNL APPROVAL.
10. REMOVE ALL THE BURRS AND REAM THE ENDS FOR CIRCULARITY AND CLEAN ENDS.
11. TUBE END SURFACE MUST BE PERPENDICULAR TO THE TUBE AXIS WITHIN +/-.010.

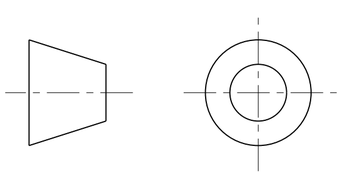

THIRD ANGLE PROJECTION

REV	DWG	CHK	ZONE	DATE	CHANGES
A	ARH	DPO		09-14-02	INITIAL RELEASE

UNLESS OTHERWISE SPECIFIED

TOLERANCES		
	X.X ± 0.1	FRAC. ± 1/64
	X.XX ± 0.03	Angles ± 1.00°
	X.XXX ± 0.010	FINISH 125 √ (µin)

DO NOT SCALE PRINT

THREADS ARE CLASS 2
CHAMFER ENDS OF ALL SCREW TREADS 30°
CUT ROUND, 1.5 THREAD RELIEF ON MACHINED THREADS
BREAK EDGES .016 MAX. ON MACHINED WORK
REMOVE BURRS, WELD SPLATTER & LOOSE SCALE
IN ACCORDANCE WITH ASME Y14.5M & B46.1

SHOP ORDERS

SER NO.	-		
ACCT NO.		NO. REQD	DATE ISSD -
DEL TO			DATE REQD -
SURFACE TREATMT			
IDENT METHOD	TAG		
PROJECT NUMBER	N/A		
PROJECT NAME	N/A		
DWG BY	KNOLLS		DATE 18-Sep-01
CHK BY	Jon Zbasnik		DATE 04-Feb-02
APR BY	Jon Zbasnik		DATE 04-Feb-02

ERNEST ORLANDO LAWRENCE BERKELEY NATIONAL LABORATORY
UNIVERSITY OF CALIFORNIA - BERKELEY

LHC IR FEEDBOX
ELECTRICAL
CRYOGENIC INSTRUMENTAION, 37 PIN HOLDER

MICROFILMED:	DWG. TYPE	SHOWN ON	SCALE: 7/8	DO NOT SCALE PRINTS
	PART	251170	SHEET 1 OF 1	
PATENT CLEAR:	DESIGN ACCT. NO.	CATEGORY CODE	DWG. NO.	SIZE / REV.
	Z5LCE2	LH2004	2513683	A

DWG. NO. 2513683 SIZE A REV. SH. 1

Dwg. File: 251368_Model File: 251368_
Rev. 17-02-2000 J. E. Osborne