DESCRIPTION	MATERIAL	MAT. LOCATION
PLATE, 3/8" THK. HR, ANNEALED, PICKLED	304L STAINLESS	-

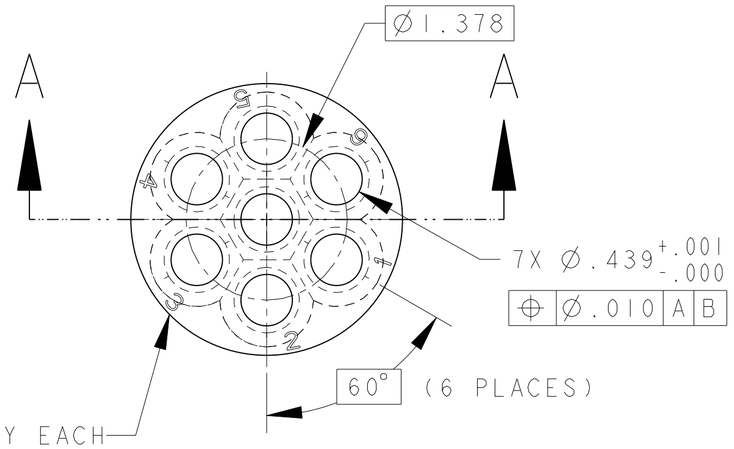

INSCRIBE NUMBERS 1 THRU 6 BY EACH HOLE, .150 HIGH, EQUALLY SPACED, ~.03 FROM THE EDGE OF THE CERAMASEAL SEAT & WELD PREP GROOVE.

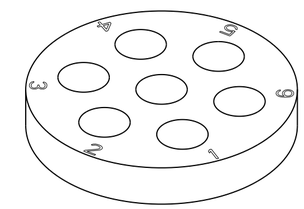

SCALE 1/1

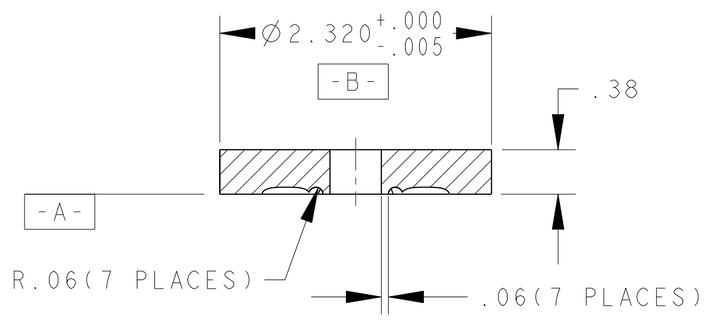

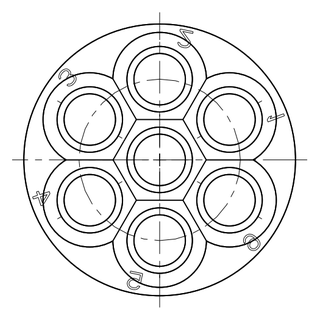

NOTES: UNLESS OTHERWISE SPECIFIED,

1. DIMENSIONS AND TOLERANCING PER ANSI Y14.5M-1982 UNITS ARE IN INCHES UNLESS OTHERWISE SPECIFIED.
2. USE OF SULFUR OR SILICONE BEARING OILS, LUBRICANTS, OR COOLANTS ARE STRICTLY PROHIBITED
3. USE OF RESIN OR RUBBER BONDED ADRASIVES UNDER POWER IS STRICTLY PROHIBITED. USE VITREOUS BONDED ABRASIVES ONLY.
4. CLEAN AFTER MACHINING PER VENDOR SPECIFICATION; SUBJECT TO LBNL APPROVAL.
5. PROTECT FINISHED PART BY BAGGING OR SIMILAR METHOD TO PROTECT AND MAINTAIN CLEANLINESS DURING SHIPMENT AND STORAGE.

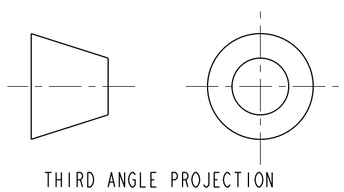

THIRD ANGLE PROJECTION

REV	DWG	CHK	ZONE	DATE	CHANGES
A	RLM	DPO		10-4-02	INITIAL RELEASE

UNLESS OTHERWISE SPECIFIED

TOLERANCES: X.X ± 0.1 | FRAC. ± 1/64 | X.XX ± 0.01 | Angles ± 1.00° | X.XXX ± 0.005 | FINISH 125 √ (µin)

DO NOT SCALE PRINT

THREADS ARE CLASS 2
CHAMFER ENDS OF ALL SCREW TREADS 30°
CUT ROUND, 1.5 THREAD RELIEF ON MACHINED THREADS
BREAK EDGES .016 MAX. ON MACHINED WORK
REMOVE BURRS, WELD SPLATTER & LOOSE SCALE
IN ACCORDANCE WITH ASME Y14.5M & B46.1

SHOP ORDERS

SER NO. -			
ACCT NO.	NO. REQD	DATE ISSD -	
DEL TO		DATE REQD -	
SURFACE TREATMT -			
IDENT METHOD TAG			
PROJECT NUMBER N/A			
PROJECT NAME N/A			
DWG BY KNOLLS		DATE 12-Sep-01	
CHK BY Jon Zbasnik		DATE 21-Apr-02	
APR BY Jon Zbasnik		DATE 21-Apr-02	

ERNEST ORLANDO LAWRENCE BERKELEY NATIONAL LABORATORY
UNIVERSITY OF CALIFORNIA - BERKELEY

LHC IR FEEDBOX
ELECTRICAL
CERAMASEAL SEAT, 7 PIN

MICROFILMED:	DWG. TYPE	SHOWN ON	SCALE: 1/1	DO NOT SCALE PRINTS
	PART	251366	SHEET 1 OF 1	
PATENT CLEAR:	DESIGN ACCT. NO.	CATEGORY CODE	DWG. NO.	SIZE / REV.
	Z5LCE2	LH2004	2513653	A

Dwg. File: 251365; Model File: CERAMASEAL_SEAT_2

Rev. 1/29/2009 J. C. Vujevic

DWG. NO. 2513653 SIZE A REV. SH. 1