| DESCRIPTION | MATERIAL | MAT. LOCATION |
|---|---|---|
| PLATE, 1.00" THK., HOT ROLLED, ANNEALED & PICKELED PER ASTM A240 | SS 304L | - |

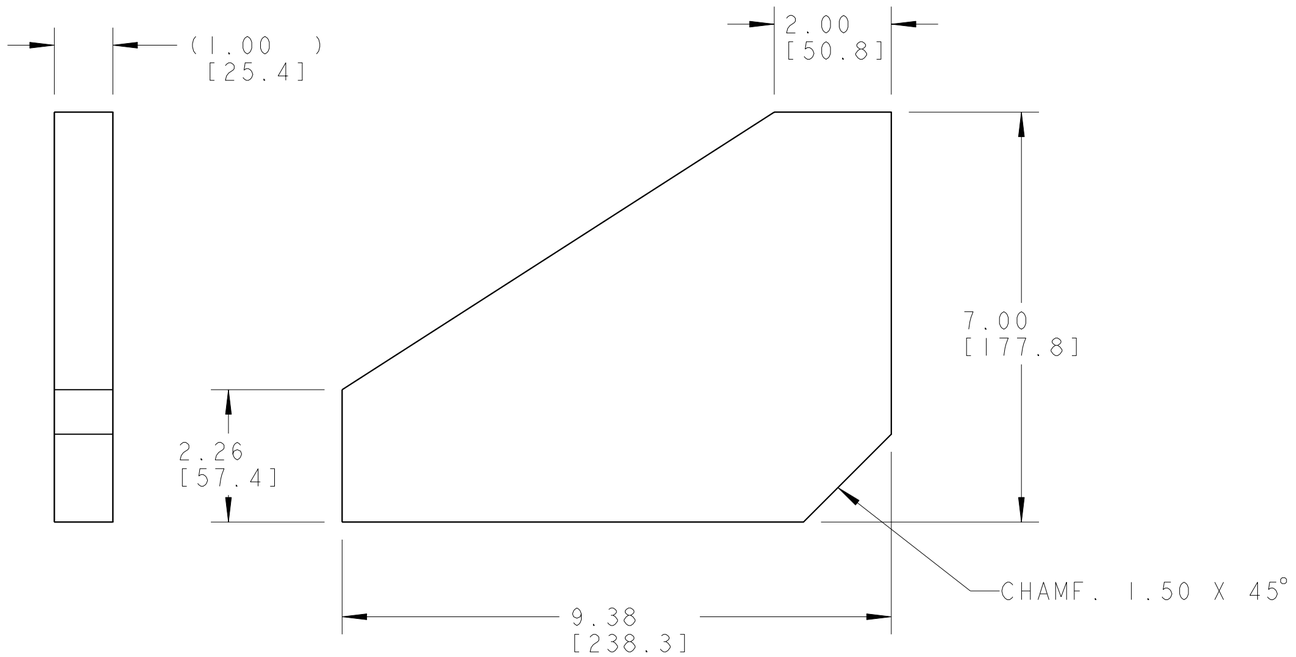


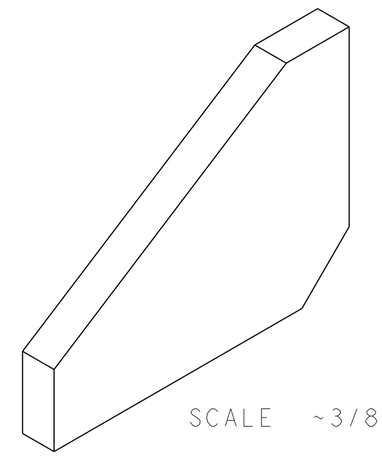


NOTES: (UNLESS OTHERWISE SPECIFIED)

1. CLEANING PROCEDURE : PER VENDOR SPECIFICATION WITH LBNL APPROVAL.
2. PACKAGING AND STORAGE PROCEDURE OF THE COMPONENTS: PER VENDOR SPECIFICATION WITH LBNL APPROVAL.
3. DIMENSIONS AND TOLERANCING PER ANSI Y14.5M-1982. UNITS ARE IN INCHES [mm] UNLESS OTHERWISE SPECIFIED.
4. USE OF SULFUR OR SILICONE BEARING OILS, LUBRICANTS, OR COOLANTS ARE STRICTLY PROHIBITED.
5. USE OF RESIN OR RUBBER BONDED ABRASIVES UNDER POWER IS STRICTLY PROHIBITED. USE VITREOUS BONDED ABRASIVES ONLY.
6. VENDOR SUGGESTED CHANGES TO TOLERANCES TO FACILITATE FABRICATION OR ASSEMBLY; SUBECT TO LBNL APPROVAL.

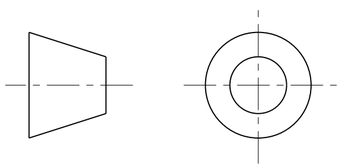

THIRD ANGLE PROJECTION

| REV | DWG | CHK | ZONE | DATE | CHANGES |
|---|---|---|---|---|---|
| A | RLM | DPO | | 10-4-02 | INITIAL RELEASE |

UNLESS OTHERWISE SPECIFIED

| TOLERANCES | | |
|---|---|---|
| | X.X ± 0.1 | FRAC. ± 1/64 |
| | X.XX ± 0.03 | Angles ± 1.00° |
| | X.XXX ± 0.010 | FINISH 125 √ (µin) |

DO NOT SCALE PRINT

THREADS ARE CLASS 2
CHAMFER ENDS OF ALL SCREW TREADS 30°
CUT ROUND, 1.5 THREAD RELIEF ON MACHINED THREADS
BREAK EDGES .016 MAX. ON MACHINED WORK
REMOVE BURRS, WELD SPLATTER & LOOSE SCALE
IN ACCORDANCE WITH ASME Y14.5M & B46.1

| SHOP ORDERS | | | |
|---|---|---|---|
| ACCT NO. | | NO. REQD | |
| DEL TO | | | |
| SURFACE TREATMT | - | | |
| IDENT METHOD | TAG | | |
| PROJECT NUMBER | N/A | | |
| PROJECT NAME | N/A | | |
| DWG BY | KNOLLS | DATE | 06-Sep-01 |
| CHK BY | Jon Zbasnik | DATE | 15-FEB-02 |
| APR BY | Jon Zbasnik | DATE | 15-FEB-02 |

SER NO. -
DATE ISSD -
DATE REQD -

ERNEST ORLANDO LAWRENCE BERKELEY NATIONAL LABORATORY
UNIVERSITY OF CALIFORNIA - BERKELEY

LHC IR FEEDBOX
VACUUM
JACK SUPPORT WEB

| MICROFILMED: | DWG. TYPE | SHOWN ON | SCALE: 1/2 | DO NOT SCALE PRINTS |
|---|---|---|---|---|
| | PART | 251165 | SHEET 1 OF 1 | |
| PATENT CLEAR: | DESIGN ACCT. NO. | CATEGORY CODE | DWG. NO. | SIZE / REV. |
| | Z5LCE2 | LH2002 | 2513633 | A |

Dwg. File: 251363 Model File: _JACK_SUPPORT_WEB

DWG. NO. 2513633 SIZE A REV. SH. 1

Rev. 11/28/2000 J. C. Oberst