DESCRIPTION	MATERIAL	MAT. LOCATION
PLATE, HOT ROLLED, ANNEALED AND PICKELED, PER ASTM A240	SS 304L	-

NOTES: (UNLESS OTHERWISE SPECIFIED)

1. THIS IS A CRYOGENIC VACUUM COMPONENT.
2. WELDING PROCEDURE: PER VENDOR SPECIFICATION WITH LBNL APPROVAL.
3. CLEANING PROCEDURE : PER VENDOR SPECIFICATION WITH LBNL APPROVAL.
4. PACKAGING AND STORAGE PROCEDURE OF THE COMPONENTS: PER VENDOR SPCIFICATION WITH LBNL APPROVAL.
5. DIMENSIONS AND TOLERANCING PER ANSI Y14.5M-1982. UNITS ARE IN INCHES [mm] UNLESS OTHERWISE SPECIFIED.
6. USE OF SULFUR OR SILICONE BEARING OILS, LUBRICANTS, OR COOLANTS ARE STRICTLY PROHIBITED.
7. USE OF RESIN OR RUBBER BONDED ABRASIVES UNDER POWER IS STRICTLY PROHIBITED. USE VITREOUS BONDED ABRASIVES ONLY.
8. VENDOR SUGGESTED CHANGES TO WELD PREPS; SUBECT TO LBNL APPROVAL.
9. MACHINE TO MATCH I.D. OF 251356.
10. VENDOR SUGGESTED CHANGES TO TOLERANCES TO FACILITATE FABRICATION OR ASSEMBLY; SUBECT TO LBNL APPROVAL.

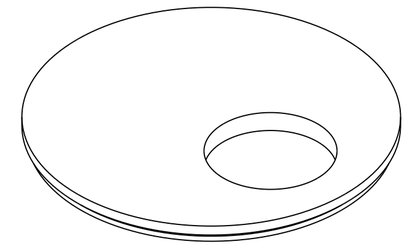

SCALE 3/8

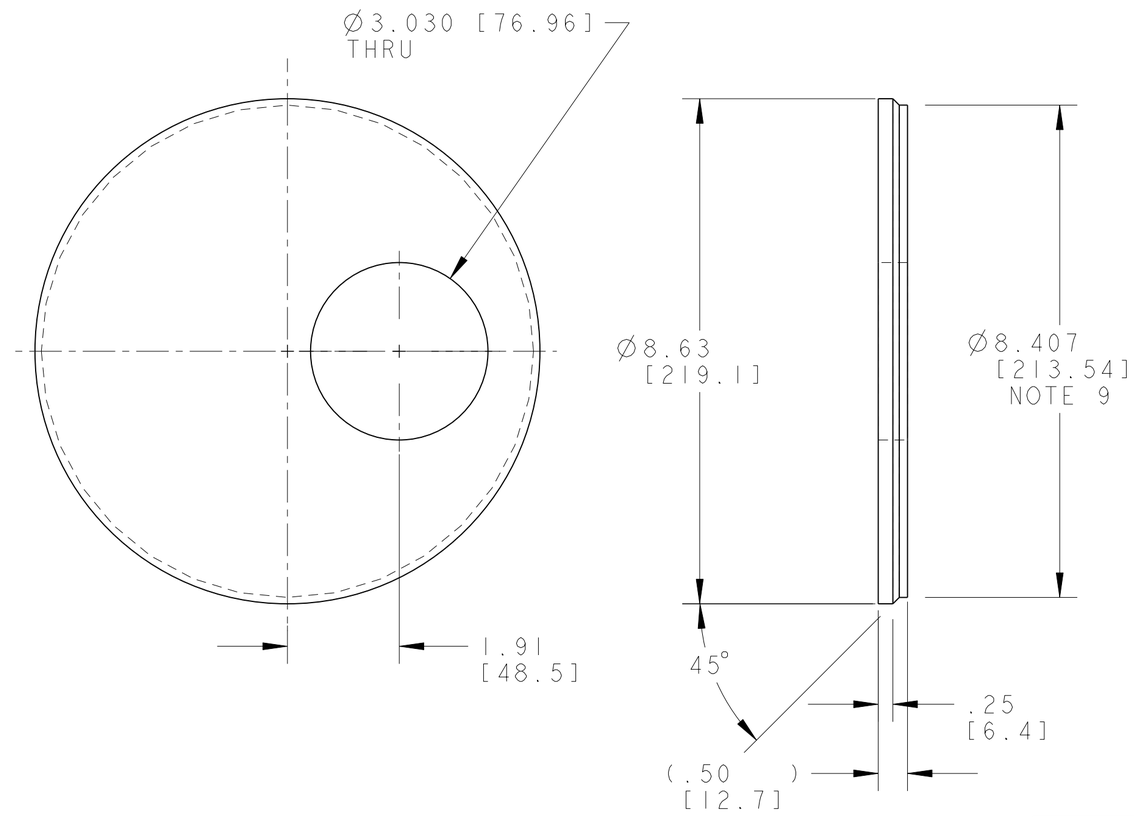

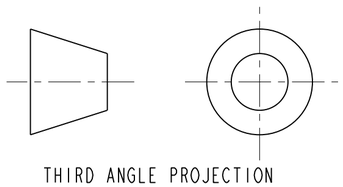

THIRD ANGLE PROJECTION

REV	DWG	CHK	ZONE	DATE	CHANGES
A	ARH	DPO		9/19/02	INITIAL RELEASE

UNLESS OTHERWISE SPECIFIED

TOLERANCES		
	X.X ± 0.1	FRAC. ± 1/64
	X.XX ± 0.03	Angles ± 1.00°
	X.XXX ± 0.010	FINISH 125 √(µin)

DO NOT SCALE PRINT

THREADS ARE CLASS 2
CHAMFER ENDS OF ALL SCREW TREADS 30°
CUT ROUND, 1.5 THREAD RELIEF ON MACHINED THREADS
BREAK EDGES .016 MAX. ON MACHINED WORK
REMOVE BURRS, WELD SPLATTER & LOOSE SCALE
IN ACCORDANCE WITH ASME Y14.5M & B46.1

SHOP ORDERS

SER NO.	-		
ACCT NO.	NO. REQD	DATE ISSD	-
DEL TO		DATE REQD	-
SURFACE TREATMT	-		
IDENT METHOD	TAG		
PROJECT NUMBER	N/A		N/A (logo)
PROJECT NAME	N/A		
DWG BY	KNOLLS	DATE	27-Jul-02
CHK BY	Jon Zbasnik	DATE	27-JUL-02
APR BY	Jon Zbasnik	DATE	27-JUL-02

ERNEST ORLANDO LAWRENCE
BERKELEY NATIONAL LABORATORY
UNIVERSITY OF CALIFORNIA - BERKELEY

LHC IR FEEDBOX
CRYOGENICS
SURGE TANK TOP

MICROFILMED:	DWG. TYPE	SHOWN ON	SCALE: 1/2	DO NOT SCALE PRINTS
	PART	-	SHEET 1 OF 1	
PATENT CLEAR:	DESIGN ACCT. NO.	CATEGORY CODE	DWG. NO.	SIZE / REV.
	Z5LCE2	LH2003	251357 3	A

DWG. NO. 251357 3 SIZE A REV. SH. 1

Dwg. File: 251357 Model File: 251357

Rev: 11/21/2002 J. K. Odenkirk