DESCRIPTION	MATERIAL	MAT. LOCATION
-	SS 300 SERIES	-

NOTES:

1. DIMENSIONS ARE IN INCHES [mm].
2. PROVIDED FOR REFERENCE ONLY.
   NOT INTENDED FOR FABRICATION)

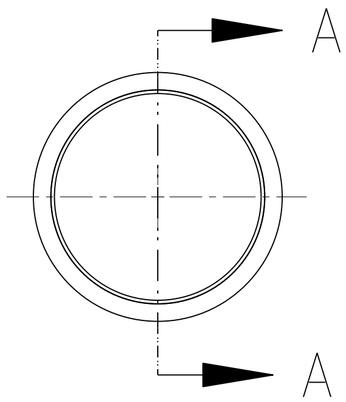

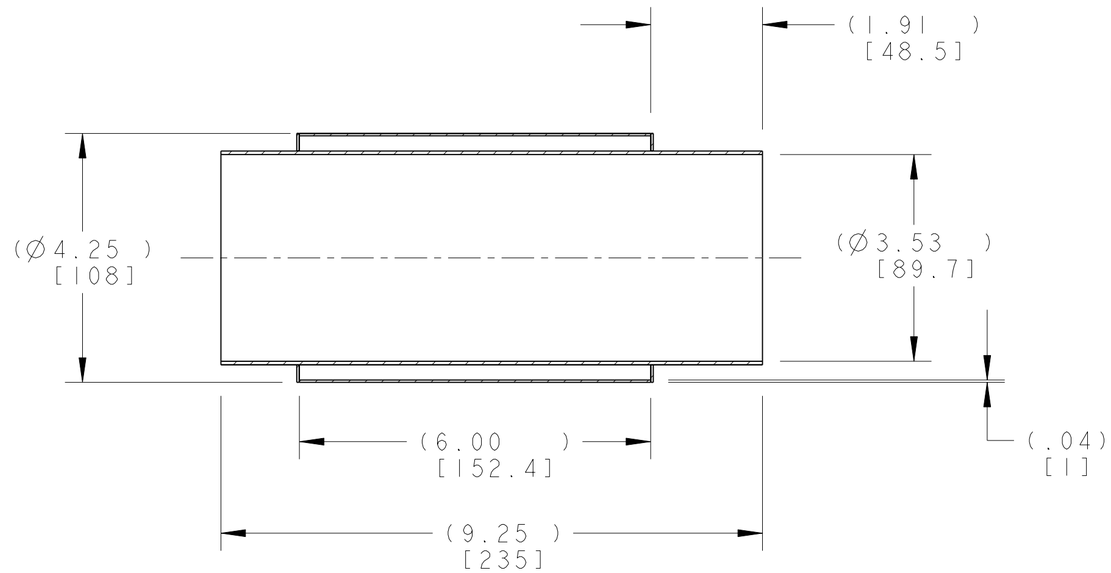

SECTION A - A

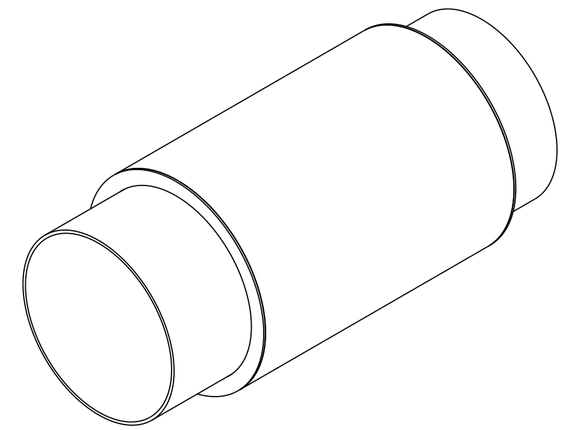

SCALE 1/2

THIRD ANGLE PROJECTION

REV	DWG	CHK	ZONE	DATE	CHANGES
A	ARH	DPO		9/19/02	INITIAL RELEASE

UNLESS OTHERWISE SPECIFIED

TOLERANCES		
	X.X ± 0.1	FRAC. ± 1/64
	X.XX ± 0.01	Angles ± 1.00°
	X.XXX ± 0.005	FINISH 125 √(µin)

DO NOT SCALE PRINT

THREADS ARE CLASS 2
CHAMFER ENDS OF ALL SCREW TREADS 30°
CUT ROUND, 1.5 THREAD RELIEF ON MACHINED THREADS
BREAK EDGES .016 MAX. ON MACHINED WORK
REMOVE BURRS, WELD SPLATTER & LOOSE SCALE
IN ACCORDANCE WITH ASME Y14.5M & B46.1

SHOP ORDERS

ACCT NO.	NO. REQD	DATE ISSD	-
DEL TO		DATE REQD	-
SURFACE TREATMT	-		
IDENT METHOD	TAG		
PROJECT NUMBER	N/A		
PROJECT NAME	FERMI LAB		
DWG BY	KNOLLS	DATE	02-Aug-02
CHK BY	Jon Zbasnik	DATE	21-Mar-02
APR BY	Jon Zbasnik	DATE	21-Mar-02

SER NO. -

FERMI LAB (logo)

ERNEST ORLANDO LAWRENCE
BERKELEY NATIONAL LABORATORY
UNIVERSITY OF CALIFORNIA - BERKELEY

LHC IR FEEDBOX
CRYOGENICS
BELLOWS, BNL# 01055055

MICROFILMED:	DWG. TYPE	SHOWN ON	SCALE: 1/2	DO NOT SCALE PRINTS
	PART	-	SHEET 1 OF 1	
PATENT CLEAR:	DESIGN ACCT. NO.	CATEGORY CODE	DWG. NO.	SIZE / REV.
	Z5LCE2	LH2003	2513503	A

Dwg. File: 2513503 Model File: 01055055.BELLOWS

Rev. 1/29/2000 J. L. Odarel

DWG. NO. 2513503 SIZE A REV. 1 SH.