DWG. NO.	SIZE	REV.	SH.
2513322	A	1	

DESCRIPTION	MATERIAL	MAT. LOCATION
12 MM DIA ROD	18-8 SS	-

NOTES: UNLESS OTHERWISE SPECIFIED,

1. DIMENSIONS AND TOLERANCING PER ANSI Y14.5M-1982
   UNITS ARE IN INCHES UNLESS OTHERWISE SPECIFIED.

2. CREATE THREADS BY ROLLING, NO THREAD RELIEF.

3. COAT SURFACES WITH 0.0002 INCH THICK ELECTRODEPOSITED
   Ag.

4. PROTECT FINISHED PART BY BAGGING OR SIMILAR METHOD TO
   PROTECT AND MAINTAIN CLEANLINESS DURING SHIPMENT
   AND STORAGE.

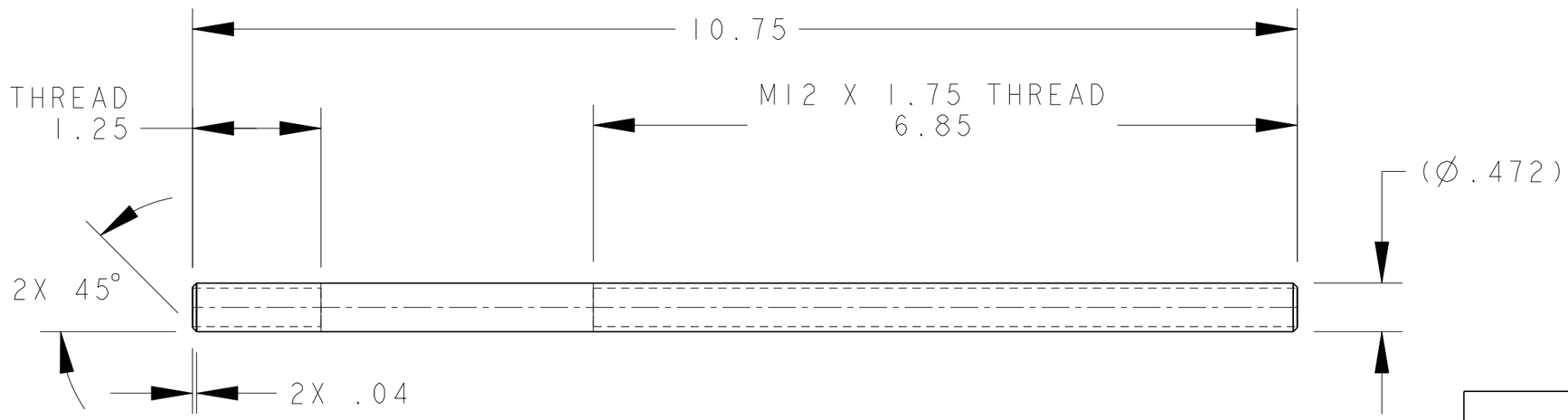

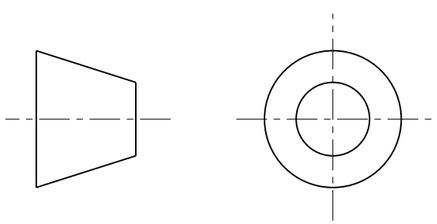

THIRD ANGLE PROJECTION

REV	DWG	CHK	ZONE	DATE	CHANGES
A	MJK		DPO	9/17/02	INITIAL RELEASE

UNLESS OTHERWISE SPECIFIED

TOLERANCES		
	X.X ± 0.1	FRAC. ± 1/64
	X.XX ± 0.03	Angles ± 1.00°
	X.XXX ± 0.010	FINISH 125 √(μin)

DO NOT SCALE PRINT

THREADS ARE CLASS 2
CHAMFER ENDS OF ALL SCREW TREADS 30°
CUT ROUND, 1.5 THREAD RELIEF ON MACHINED THREADS
BREAK EDGES .016 MAX. ON MACHINED WORK
REMOVE BURRS, WELD SPLATTER & LOOSE SCALE
IN ACCORDANCE WITH ASME Y14.5M & B46.1

SHOP ORDERS

SER NO.	-		
ACCT NO.		NO. REQD	DATE ISSD -
DEL TO			DATE REQD -
SURFACE TREATMT	-		
IDENT METHOD	TAG		
PROJECT NUMBER	N/A		
PROJECT NAME	N/A		
DWG BY	A. ZACHOSZCZ	DATE	17-Oct-01
CHK BY	Jon Zbasnik	DATE	4/2/02
APR BY	Jon Zbasnik	DATE	4/2/02

ERNEST ORLANDO LAWRENCE BERKELEY NATIONAL LABORATORY
UNIVERSITY OF CALIFORNIA - BERKELEY

LHC IR FEEDBOX
ELECTRICAL
M12 X 1.75 ROD, 10.75 LG

MICROFILMED:	DWG. TYPE	SHOWN ON	SCALE: 3/4	DO NOT SCALE PRINTS
	PART	-	SHEET 1 OF 1	
PATENT CLEAR:	DESIGN ACCT. NO.	CATEGORY CODE	DWG. NO.	SIZE / REV.
	Z5LCE2	LH2004	2513322	A

Dwg. File: 251332 Model File: HTS_MOUNTING_FRONT_STUD

Rev. 1/29/2000 J. R. Osborn