DESCRIPTION	MATERIAL	MAT. LOCATION
BAR OR ROD,1" THK.HR, ANNEALED, PKLD, ASTM 240 OR 479	SS 304L	-

NOTES: (UNLESS OTHERWISE SPECIFIED)

1. DIMENSIONS AND TOLERANCING PER ANSI Y14.5M-1982.
   UNITS ARE IN INCHES [mm] UNLESS OTHERWISE SPECIFIED.
2. PACKAGING AND STORAGE PROCEDURE OF THE COMPONENTS:
   PER VENDOR SPECIFICATION WITH LBNL APPROVAL.

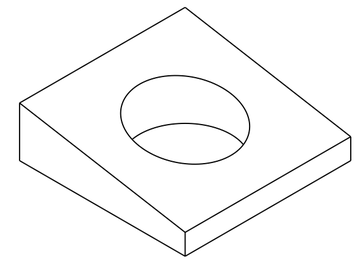

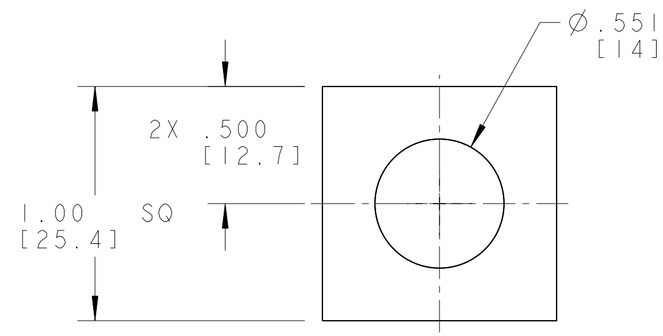

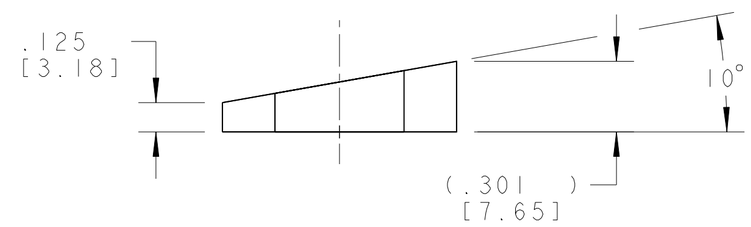

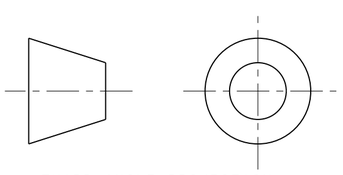

THIRD ANGLE PROJECTION

REV	DWG	CHK	ZONE	DATE	CHANGES
A	ARH	DPO		9-16-02	INITIAL RELEASE

UNLESS OTHERWISE SPECIFIED

TOLERANCES		
	X.X ± 0.1	FRAC. ± 1/64
	X.XX ± 0.03	Angles ± 1.00°
	X.XXX ± 0.010	FINISH 125 (μin)

DO NOT SCALE PRINT

THREADS ARE CLASS 2
CHAMFER ENDS OF ALL SCREW TREADS 30°
CUT ROUND, 1.5 THREAD RELIEF ON MACHINED THREADS
BREAK EDGES .016 MAX. ON MACHINED WORK
REMOVE BURRS, WELD SPLATTER & LOOSE SCALE
IN ACCORDANCE WITH ASME Y14.5M & B46.1

SHOP ORDERS		SER NO. -
ACCT NO.	NO. REQD	DATE ISSD -
DEL TO		DATE REQD -
SURFACE TREATMT -		
IDENT METHOD TAG		
PROJECT NUMBER N/A		
PROJECT NAME N/A		
DWG BY A. ZACHOSZCZ		DATE 08-Oct-01
CHK BY Jon Zbasnik		DATE 4-02-02
APR BY Jon Zbasnik		DATE 4-02-02

ERNEST ORLANDO LAWRENCE
BERKELEY NATIONAL LABORATORY
UNIVERSITY OF CALIFORNIA - BERKELEY

LHC IR FEEDBOX
ELECTRICAL
BEVELED WASHER

MICROFILMED:	DWG. TYPE PART	SHOWN ON	SCALE: 2/1	DO NOT SCALE PRINTS
			SHEET 1 OF 1	
PATENT CLEAR:	DESIGN ACCT. NO. Z5LCE2	CATEGORY CODE LH2004	DWG. NO. 2513303	SIZE / REV. A

DWG. NO. 2513303 SIZE REV. A SH. 1

Dwg. File: 251330 Model File: BEVELED_WASHER