DESCRIPTION	MATERIAL	MAT. LOCATION
BELLOWS, FNAL# 5520-MD-390065	SS 300 SERIES	-

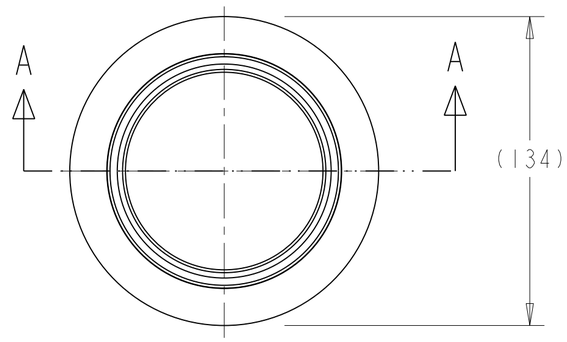

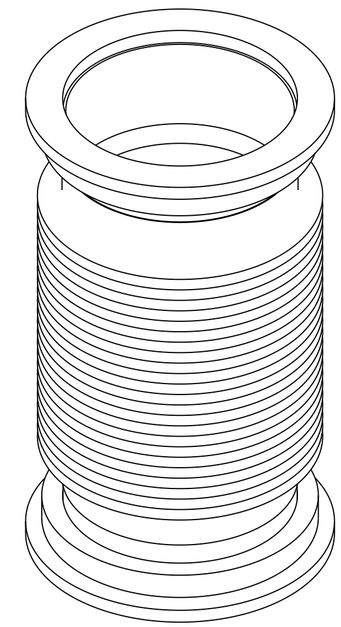

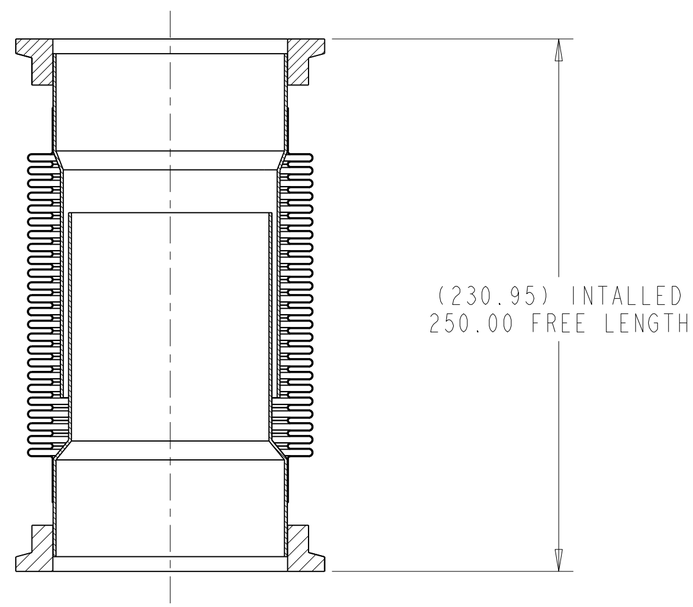

SECTION A - A

NOTES:

1. DIMENSIONS IN MM.
2. PROVIDED FOR REFERENCE ONLY.
   NOT INTENDED FOR FABRICATION.

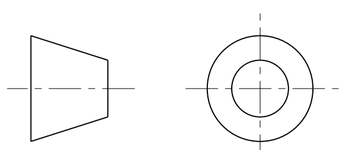

THIRD ANGLE PROJECTION

REV	DWG	CHK	ZONE	DATE	CHANGES
A	ARH	DPO		9/19/02	INITIAL RELEASE

UNLESS OTHERWISE SPECIFIED

TOLERANCES		
	X.X ± 0.1	FRAC. ± 1/64
	X.XX ± 0.01	Angles ± 1.00°
	X.XXX ± 0.005	FINISH 125 (μin)

DO NOT SCALE PRINT

THREADS ARE CLASS 2
CHAMFER ENDS OF ALL SCREW TREADS 30°
CUT ROUND, 1.5 THREAD RELIEF ON MACHINED THREADS
BREAK EDGES .016 MAX. ON MACHINED WORK
REMOVE BURRS, WELD SPLATTER & LOOSE SCALE
IN ACCORDANCE WITH ASME Y14.5M & B46.1

SHOP ORDERS

ACCT NO.	NO. REQD	SER NO.	-
DEL TO		DATE ISSD	-
SURFACE TREATMT	-	DATE REQD	-
IDENT METHOD	TAG		
PROJECT NUMBER	N/A	FERMI LAB (logo)	
PROJECT NAME	FERMI LAB		
DWG BY	KNOLLS	DATE	07-Feb-02
CHK BY	Jon Zbasnik	DATE	21-Mar-02
APR BY	Jon Zbasnik	DATE	21-Mar-02

ERNEST ORLANDO LAWRENCE
BERKELEY NATIONAL LABORATORY
UNIVERSITY OF CALIFORNIA - BERKELEY

LHC IR FEEDBOX
CRYOGENICS
BELLOWS, FNAL# 5520-MD-390065

MICROFILMED:	DWG. TYPE	SHOWN ON	SCALE: 0.500	DO NOT SCALE PRINTS
	ASSEM		SHEET 1 OF 1	
PATENT CLEAR:	DESIGN ACCT. NO.	CATEGORY CODE	DWG. NO.	SIZE / REV.
	Z5LCE2	LH2003	2513143	A

DWG. NO. 2513143 SIZE REV. A SH. 1

Dwg. File: 251314 Model File: 390065

Rev. 1/29/2000 J. R. Osborn