NOTES: (UNLESS OTHERWISE SPECIFIED)

1. THIS IS A CRYOGENIC VACUUM COMPONENT.
2. WELDING OR SOLDERING PROCEDURE: PER VENDOR SPECIFICATION WITH LBNL APPROVAL.
3. CLEANING PROCEDURE : PER VENDOR SPECIFICATION WITH LBNL APPROVAL.
4. PACKAGING AND STORAGE PROCEDURE OF THE COMPONENTS: PER VENDOR SPCIFICATION WITH LBNL APPROVAL.
5. DIMENSIONS AND TOLERANCING PER ANSI Y14.5M-1982. UNITS ARE IN INCHES UNLESS OTHERWISE SPECIFIED.
6. USE OF SULFUR OR SILICONE BEARING OILS, LUBRICANTS, OR COOLANTS ARE STRICTLY PROHIBITED.
7. USE OF RESIN OR RUBBER BONDED ABRASIVES UNDER POWER IS STRICTLY PROHIBITED. USE VITREOUS BONDED ABRASIVES ONLY.
8. TIN NOTED AREAS WITH 60/40 Sn/Pb SOLDER, USE RESIN FLUX.

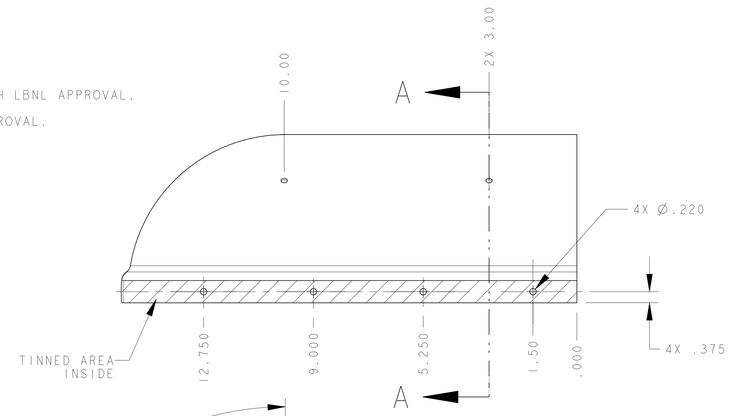

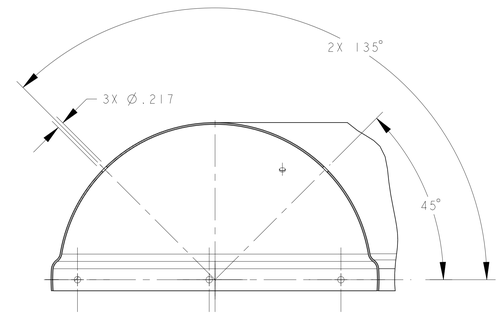

SECTION A - A

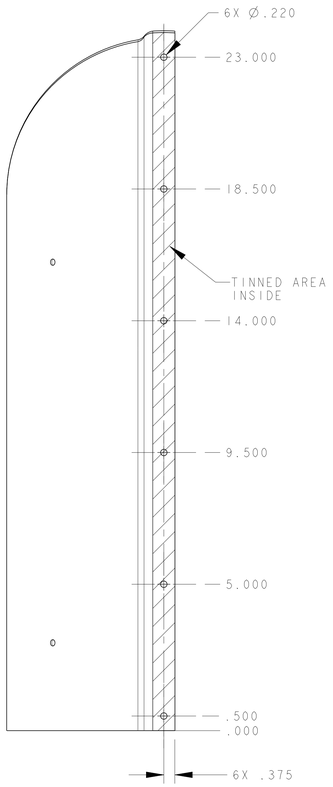

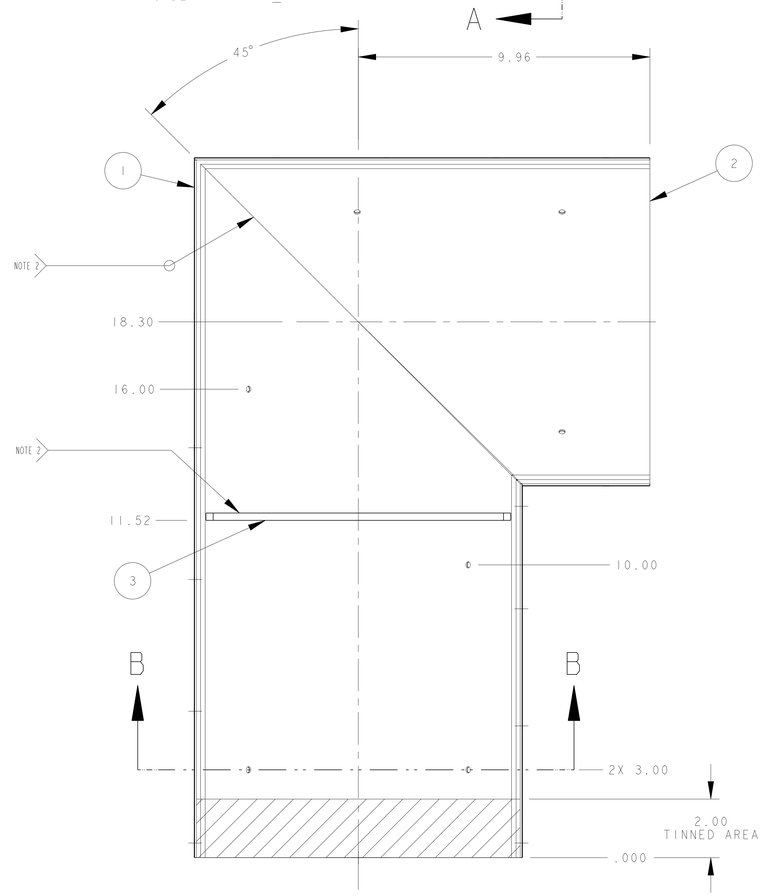

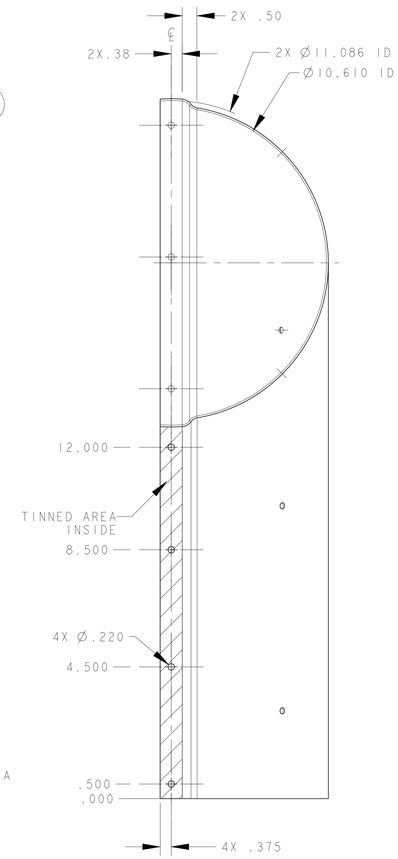

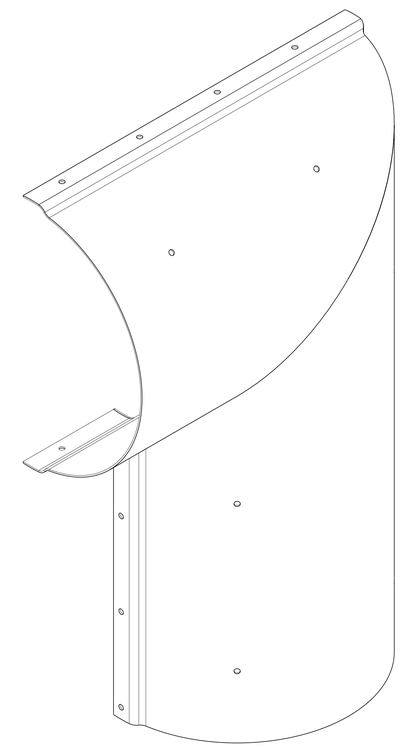

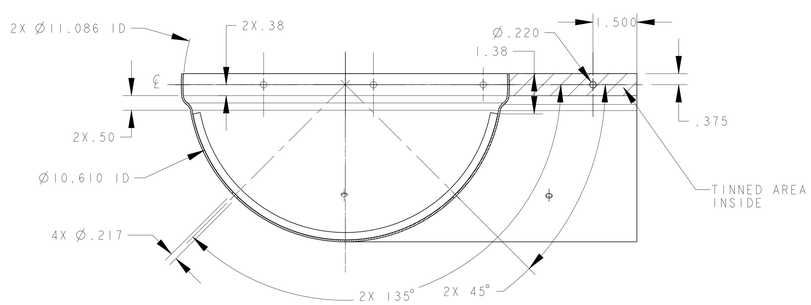

SECTION B - B

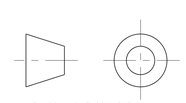

THIRD ANGLE PROJECTION

ITEM	PART NO	REQD	DESCRIPTION	MATERIAL
3	25M915	1	RETAINING BAR	COPPER, OFHC, C101
2	-	1	COPPER SHEET, .063 THICK	COPPER, OFHC, C101
1	-	1	COPPER SHEET, .063 THICK	COPPER, OFHC, C101

REV	DWG	CHK	ZONE	DATE	CHANGES
A	RLM	DPO		10-4-02	INITIAL RELEASE

UNLESS OTHERWISE SPECIFIED
TOLERANCES: X.X ± 0.1 FRAC. ± 1/64; X.XX ± 0.03 Angles ± 1.00°; X.XXX ± 0.010 FINISH 125 μin
DO NOT SCALE PRINT
THREADS ARE CLASS 2
CHAMFER ENDS OF ALL SCREW THREADS 30°
CUT ROUND, 1.5 THREAD RELIEF ON MACHINED THREADS
BREAK EDGES .016 MAX. ON MACHINED WORK
REMOVE BURRS, WELD SPLATTER & LOOSE SCALE
IN ACCORDANCE WITH ASME Y14.5M & BAL.

SHOP ORDERS
ACCT NO. | NO. REQD | DATE ISSD | DATE REQD | SER NO.
DEL TO | SURFACE TREATMT | IDENT METHOD TAG | PROJECT NUMBER N/A | PROJECT NAME N/A
DWG BY R LA MANTIA DATE 28-Feb-02
CHK BY Jon Zbasnik DATE 21-Apr-02
APR BY Jon Zbasnik DATE 21-Apr-02

ERNEST ORLANDO LAWRENCE BERKELEY NATIONAL LABORATORY
UNIVERSITY OF CALIFORNIA - BERKELEY

LHC IR FEEDBOX
VACUUM
CLAM SHELL 1, QQSC

MICROFILMED: | PATENT CLEAR: | DWG. TYPE ASSEM | DESIGN ACCT. NO. Z5LCE2 | SHOWN ON - | CATEGORY CODE LH2002 | SCALE: 1/2 | SHEET 1 OF 1 | DWG. NO. 2512606 | SIZE A | REV. | DO NOT SCALE PRINTS

DWG. NO. 2512606 SIZE A REV. 1