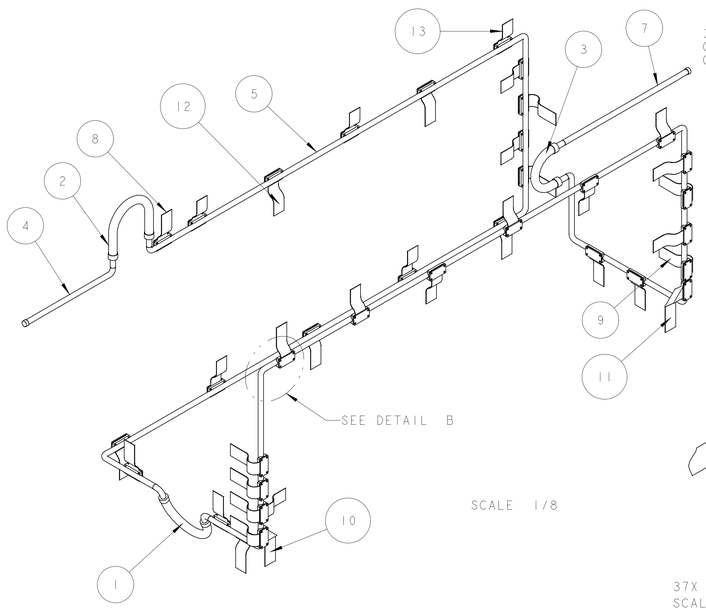


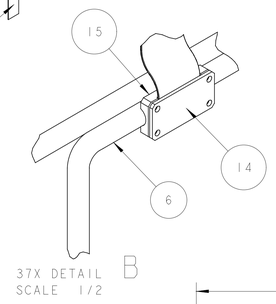


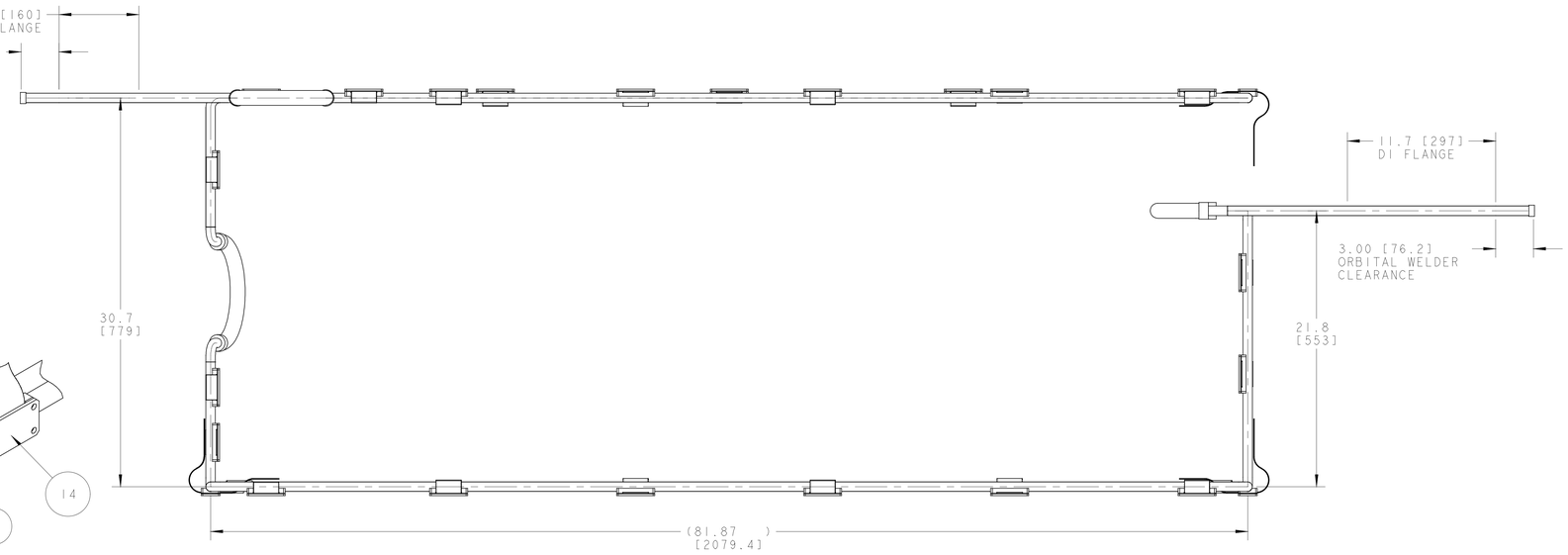


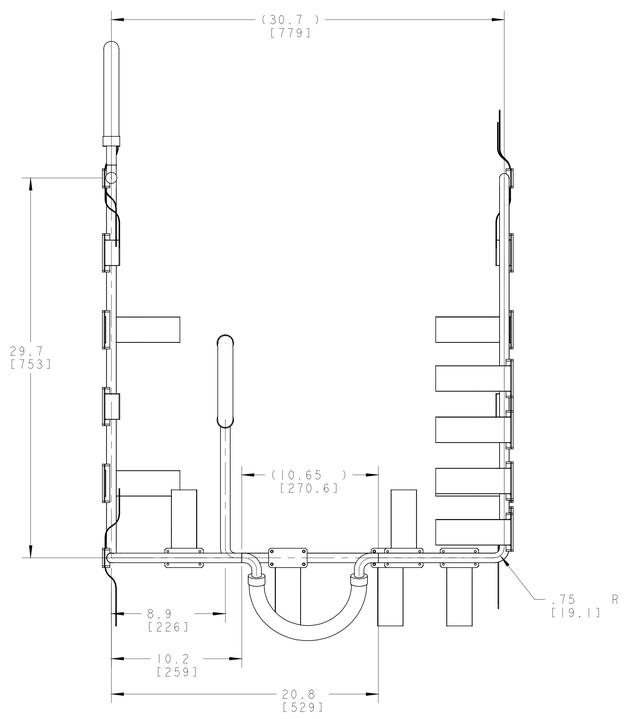


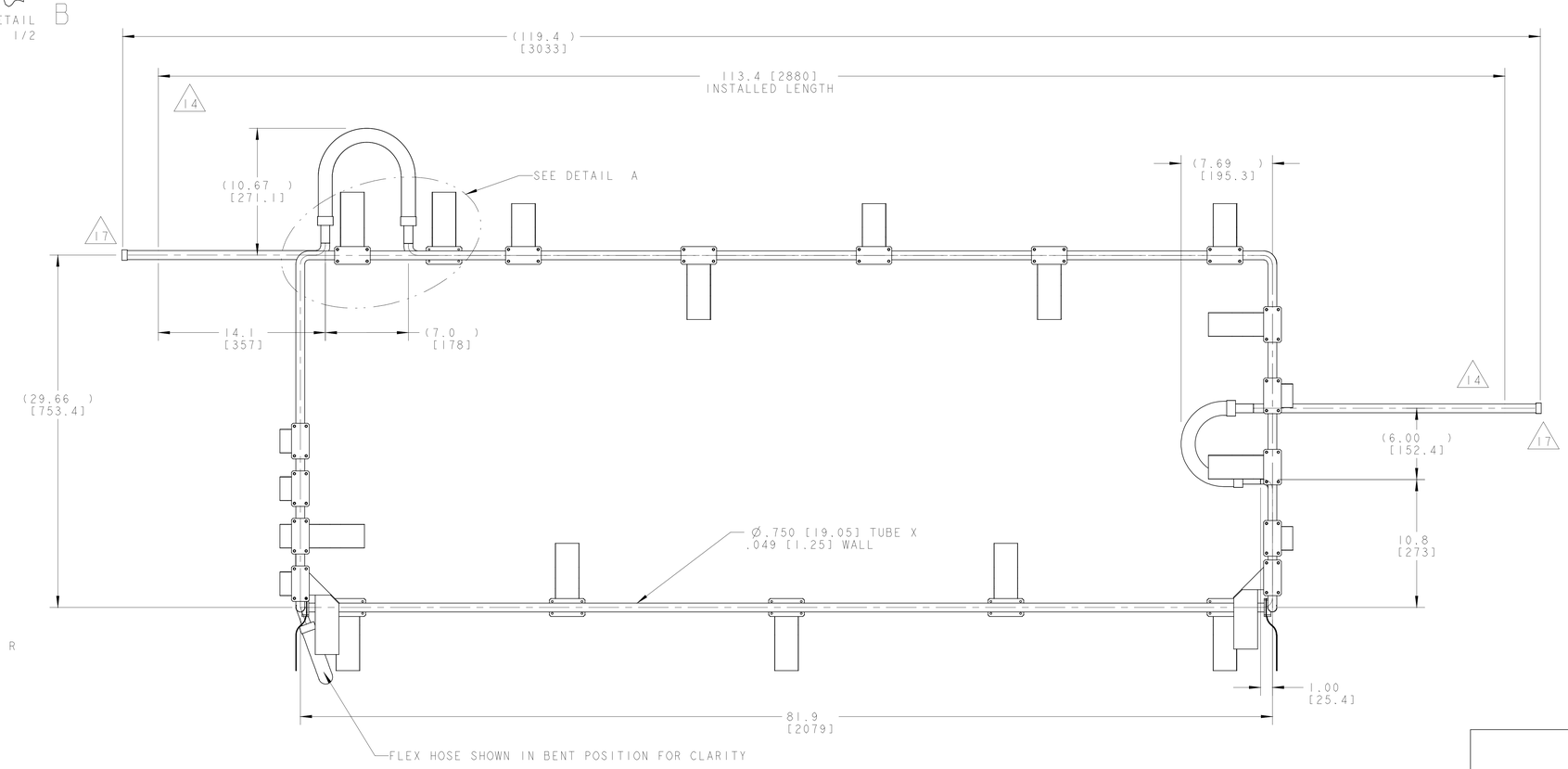


NOTES: (UNLESS OTHERWISE SPECIFIED)

1. THIS IS A CRYOGENIC VACUUM COMPONENT.
2. WELDING PROCEDURE: PER VENDOR SPECIFICATION WITH LBNL APPROVAL.
3. CLEANING PROCEDURE : PER VENDOR SPECIFICATION WITH LBNL APPROVAL.
4. PACKAGING AND STORAGE PROCEDURE OF THE COMPONENTS: PER VENDOR SPECIFICATION WITH LBNL APPROVAL.
5. DIMENSIONS AND TOLERANCING PER ANSI Y14.5M-1982. UNITS ARE IN INCHES [mm] UNLESS OTHERWISE SPECIFIED.
6. USE OF SULFUR OR SILICONE BEARING OILS, LUBRICANTS, OR COOLANTS ARE STRICTLY PROHIBITED.
7. USE OF RESIN OR RUBBER BONDED ABRASIVES UNDER POWER IS STRICTLY PROHIBITED. USE VITREOUS BONDED ABRASIVES ONLY.
8. VENDOR SUGGESTED CHANGES TO WELD PREPS; SUBJECT TO LBNL APPROVAL.
9. FITTINGS MAY BE USED IN PLACE OF BENDS; SUBJECT TO LBNL APPROVAL.
10. VENDOR SUGGESTED CHANGES TO TOLERANCES TO FACILITATE FABRICATION OR ASSEMBLY; SUBECT TO LBNL APPROVAL.
11. REMOVE ALL THE BURRS AND REAM THE ENDS FOR CIRCULARITY AND CLEAN ENDS.
12. TUBE END SURFACE MUST BE PERPENDICULAR TO THE TUBE AXIS WITHIN +/-.010.
13. PERFORM ACCEPTANCE TESTS PER SECTION 3.2 OF LBNL SPECIFICATION M856.
14. A MARK DESIGNATING THE INSTALLED LENGTH WILL BE UTILIZED DURING FINAL INSTALLATION OF THE FEEDBOX ASSEMBLY. MARK, SCRIBE OR ETCH THIS LOCATION IN A PERMANENT MANNER, SUBJECT TO LBNL APPROVAL, TO AN ACCURACY OF ±0.063".
15. PROVIDE A MINIMUM LENGTH OF 4.0" OF STRAIGHT, SMOOTH PIPE ON THE INDICATED SIDE OF THE INSTALLED LENGTH MARK FOR PIPE WELDING DURING FINAL INSTALLATION OF THE FEEDBOX ASSEMBLY.
16. PIPE MUST BE STRAIGHT AND SMOOTH (NO BUMPS) FOR 0.5" ON EITHER SIDE OF THE CENTER-PLANE OF THE SUPPORT.
17. CAP BOTH ENDS OF PIPE AFTER ACCEPTANCE TESTS PER SECTION 3.2 OF LBNL SPECIFICATION M856.

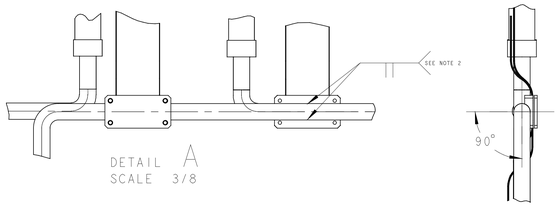


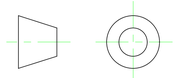


| ITEM | PART NO | REQD | DESCRIPTION | MATERIAL |
|---|---|---|---|---|
| 15 | 25M875 | 35 | CLAMP BASE PLATE, 3/4 TUBE | COPPER, OFHC, C10100 |
| 14 | 251427 | 35 | CLAMP COVER | COPPER, OFHC, C10100 |
| 13 | - | 6 | STANDARD BRAIDED COPPER STRAP, 1/8" X 1.00" | OFC COPPER BRAID |
| 12 | - | 10 | STANDARD BRAIDED COPPER STRAP, 1/8" X 1.00" | OFC COPPER BRAID |
| 11 | - | 1 | STANDARD BRAIDED COPPER STRAP, 1/8" X 1.00" | OFC COPPER BRAID |
| 10 | - | 1 | STANDARD BRAIDED COPPER STRAP, 1/8" X 1.00" | OFC COPPER BRAID |
| 9 | - | 8 | STANDARD BRAIDED COPPER STRAP, 1/8" X 1.00" | OFC COPPER BRAID |
| 8 | - | 11 | STANDARD BRAIDED COPPER STRAP, 1/8" X 1.00" | OFC COPPER BRAID |
| 7 | - | 1 | PIPE 4, PER ASTM A269 | - |
| 6 | - | 1 | PIPE 3, PER ASTM A269 | - |
| 5 | - | 1 | PIPE 2, PER ASTM A269 | - |
| 4 | - | 1 | PIPE 1, PER ASTM A269 | - |
| 3 | - | 1 | BRAIDED FLEX HOSE, .625" ID X 3/4" STRAIGHT WELD ENDS | SS 300 SERIES |
| 2 | - | 1 | BRAIDED FLEX HOSE, .625" ID X 3/4" STRAIGHT ENDS | SS 300 SERIES |
| 1 | - | 1 | BRAIDED FLEX HOSE, .625" ID X 3/4" ELBOW WELD ENDS | SS 300 SERIES |

| REV | DWG | CHK | ZONE | DATE | CHANGES |
|---|---|---|---|---|---|
| A | ARH | DPO | | 9-17-02 | INITIAL RELEASE |

UNLESS OTHERWISE SPECIFIED
TOLERANCES: X.X ± 0.1 | FRAC. ± 1/64 | X.XX ± 0.03 | Angles ± 1.00° | X.XXX ± 0.010 | FINISH 125/√(Ra)
DO NOT SCALE PRINT
THREADS ARE CLASS 2
CHAMFER ENDS OF ALL SCREW THEADS 30°
CUT ROUND, 1.5 THREAD RELIEF ON MACHINED THREADS
BREAK EDGES .016 MAX., ON MACHINED WORK
REMOVE BURRS, WELD SPLATTER & LOOSE SCALE
IN ACCORDANCE WITH ASME Y14.5M & B46.1

SHOP ORDERS
ACCT NO. | NO. REQD | DATE ISSD
DEL | DATE REQD
TS
SURFACE TREATMT
IDENT METHOD | TAG
PROJECT NUMBER | N/A
PROJECT NAME | N/A
DWN BY | R LA MANITIA | DATE 29-Jul-02
CHK BY | Jon Zbasnik | DATE 4-02-02
APR BY | Jon Zbasnik | DATE 4-02-02

ERNEST ORLANDO LAWRENCE BERKELEY NATIONAL LABORATORY
UNIVERSITY OF CALIFORNIA · BERKELEY

LHC IR FEEDBOX
CRYOGENICS
PIPE, EX

MICROFILMED: | PATENT CLEAR:
DWG. TYPE: ASSEM | SHOWN ON: VARIOUS | SCALE: 1/32 | DO NOT SCALE PRINTS
DESIGN ACCT. NO.: Z5LCE2 | CATEGORY CODE: LH2003 | DWG. NO.: 2512126 | SIZE: A | REV.:
SHEET 1 OF 4

SIZE A | REV. A | DWG. NO. 2512126

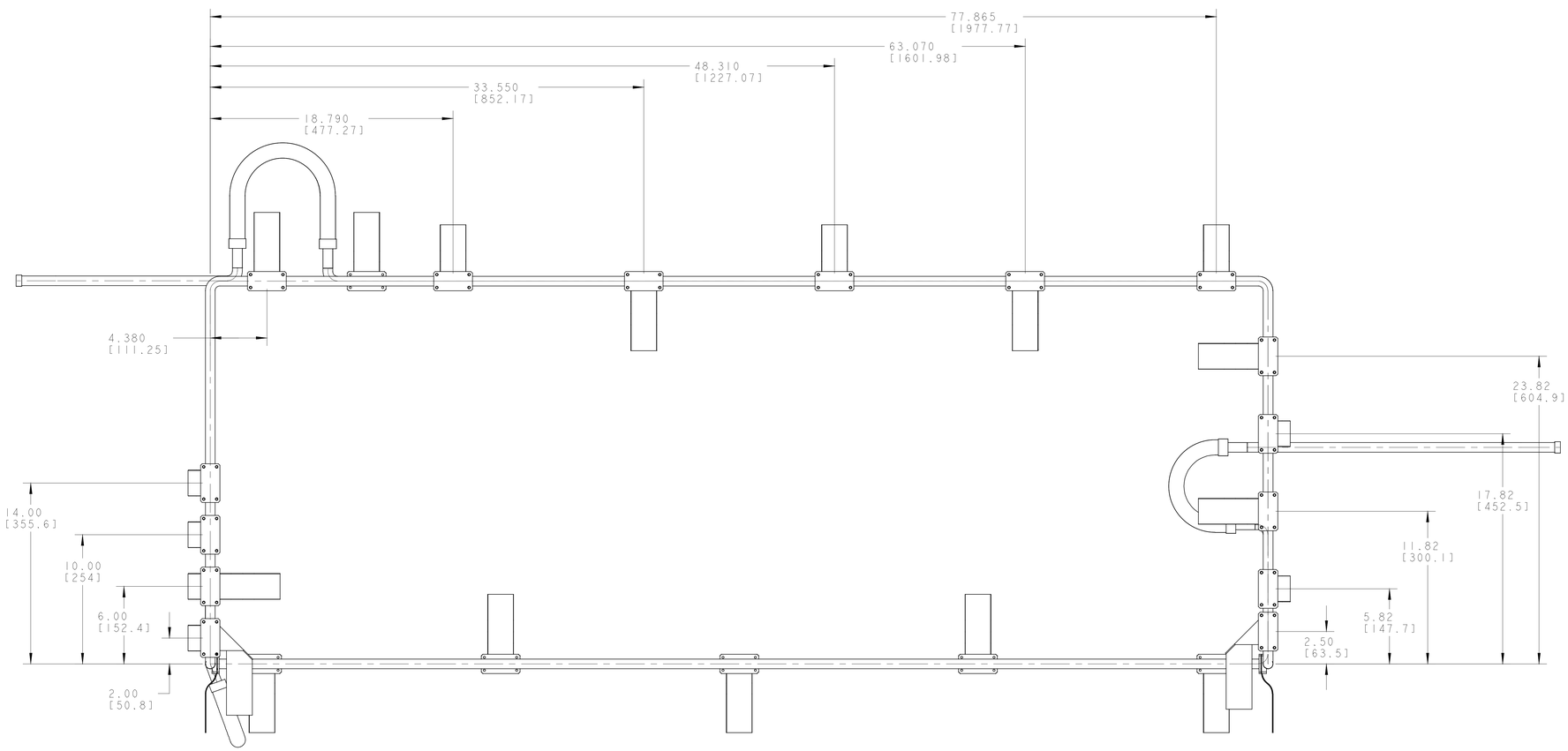


RIGHT SIDE VIEW SCALE 1/4

ERNEST ORLANDO LAWRENCE
BERKELEY NATIONAL LABORATORY
UNIVERSITY OF CALIFORNIA - BERKELEY

LHC IR FEEDBOX
CRYOGENICS
PIPE, EX

| MICROFILMED: | DWG. TYPE | SHOWN ON | SCALE: 7/32 | DO NOT SCALE PRINTS |
|---|---|---|---|---|
| | ASSEM | VARIOUS | SHEET 2 OF 4 | |
| PATENT CLEAR: | DESIGN ACCT. NO. | CATEGORY CODE | DWG. NO. | SIZE / REV. |
| | Z5LCE2 | LH2003 | 2512126 | A |

DWG. NO. 2512126 SIZE A REV. 2

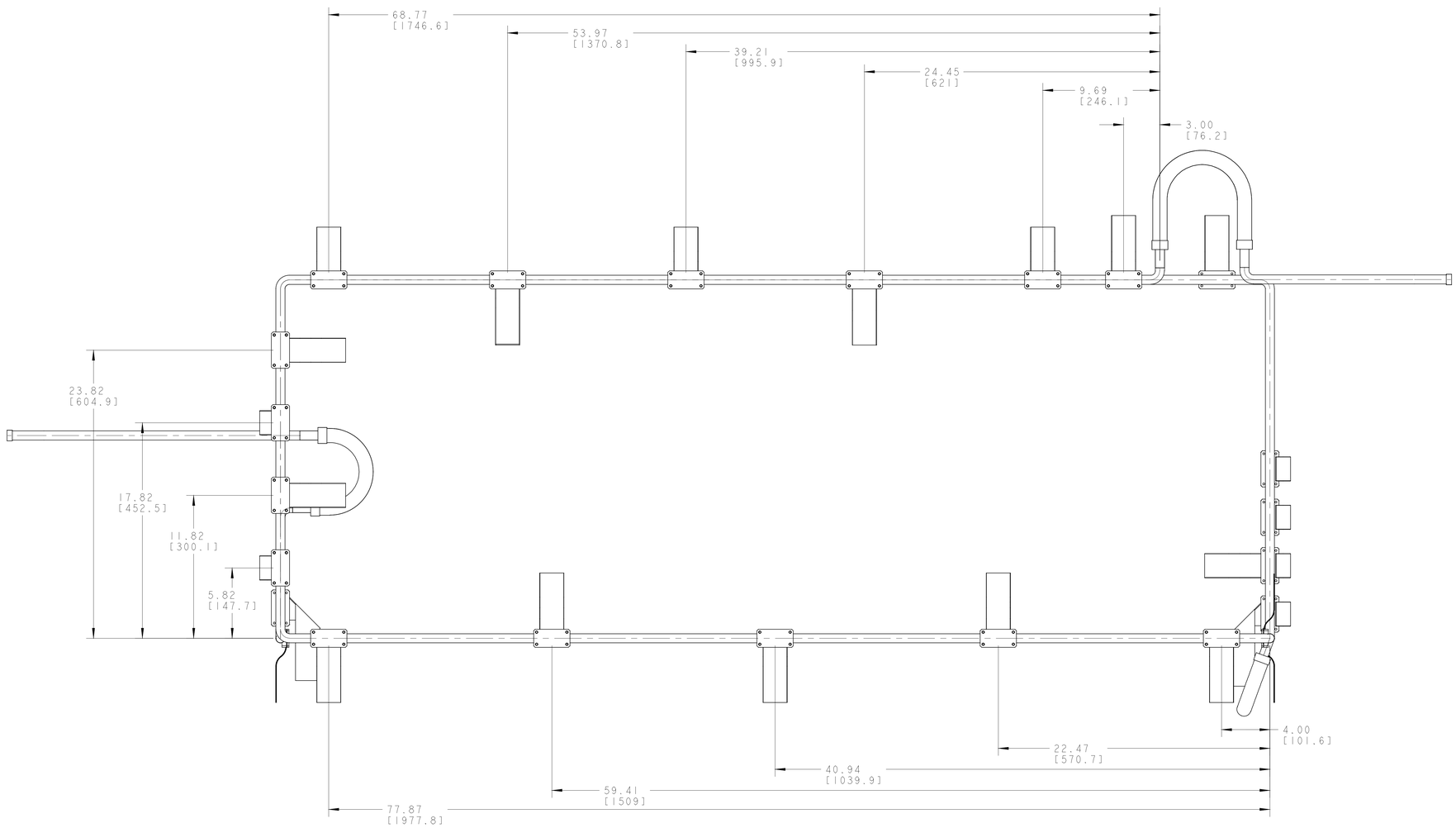


# LEFT SIDE VIEW SCALE 1/4

ERNEST ORLANDO LAWRENCE
BERKELEY NATIONAL LABORATORY
UNIVERSITY OF CALIFORNIA · BERKELEY

LHC IR FEEDBOX
CRYOGENICS
PIPE, EX

| MICROFILMED: | DWG. TYPE | SHOWN ON | SCALE: 7/32 | DO NOT SCALE PRINTS |
|---|---|---|---|---|
| | ASSEM | VARIOUS | SHEET 3 OF 4 | |
| PATENT CLEAR: | DESIGN ACCT. NO. | CATEGORY CODE | DWG. NO. | SIZE / REV. |
| | Z5LCE2 | LH2003 | 2512126 | A |

DWG. NO. 2512126 SIZE A REV. SHT. 3

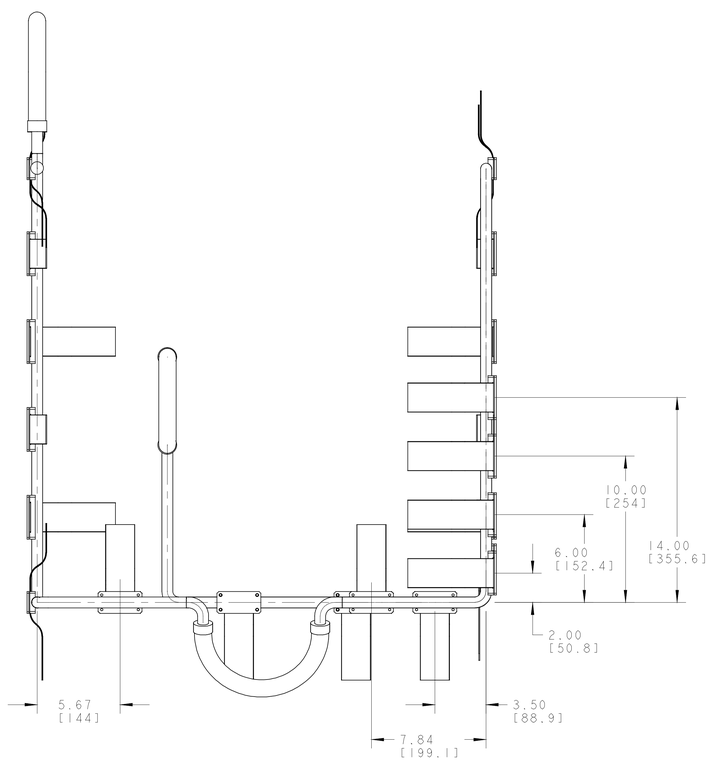


FRONT VIEW SCALE 1/4

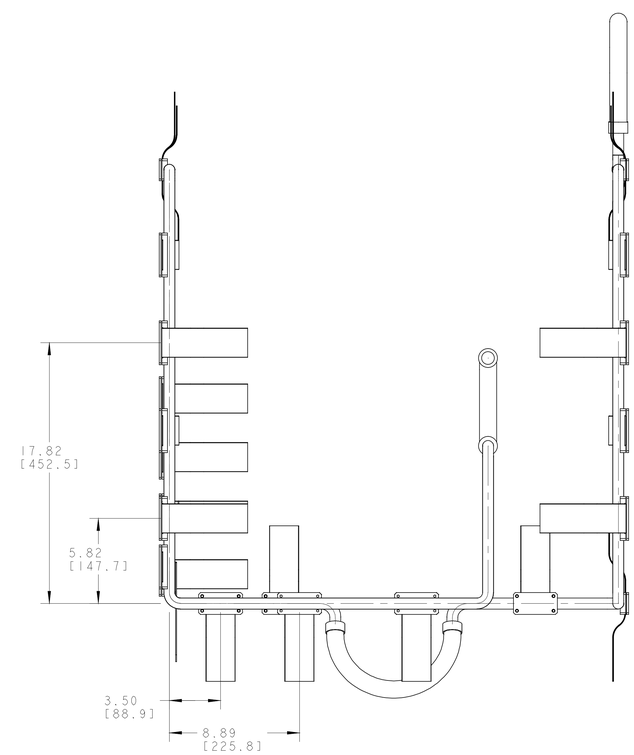


REAR VIEW SCALE 1/4

ERNEST ORLANDO LAWRENCE
BERKELEY NATIONAL LABORATORY
UNIVERSITY OF CALIFORNIA - BERKELEY

LHC IR FEEDBOX
CRYOGENICS
PIPE, EX

| MICROFILMED: | DWG. TYPE | SHOWN ON | SCALE: 7/32 | DO NOT SCALE PRINTS |
|---|---|---|---|---|
| | ASSEM | VARIOUS | SHEET 4 OF 4 | |
| PATENT CLEAR: | DESIGN ACCT. NO. | CATEGORY CODE | DWG. NO. | SIZE / REV. |
| | Z5LCE2 | LH2003 | 2512126 | A |

DWG. NO. 2512126 SIZE A REV. 4