| DESCRIPTION | MATERIAL | MAT. LOCATION |
|---|---|---|
| ROUN BAR | AL 6061-T6 | - |

NOTES: UNLESS OTHERWISE SPECIFIED,

1. DIMENSIONS AND TOLERANCING PER ANSI Y14.5M-1982 UNITS ARE IN INCHES [mm] UNLESS OTHERWISE SPECIFIED.
2. CLEAR ANODIZE AFTER MACHINING
3. PROTECT FINISHED PART BY BAGGING OR SIMILAR METHOD TO PROTECT AND MAINTAIN CLEANLINESS DURING SHIPMENT AND STORAGE.

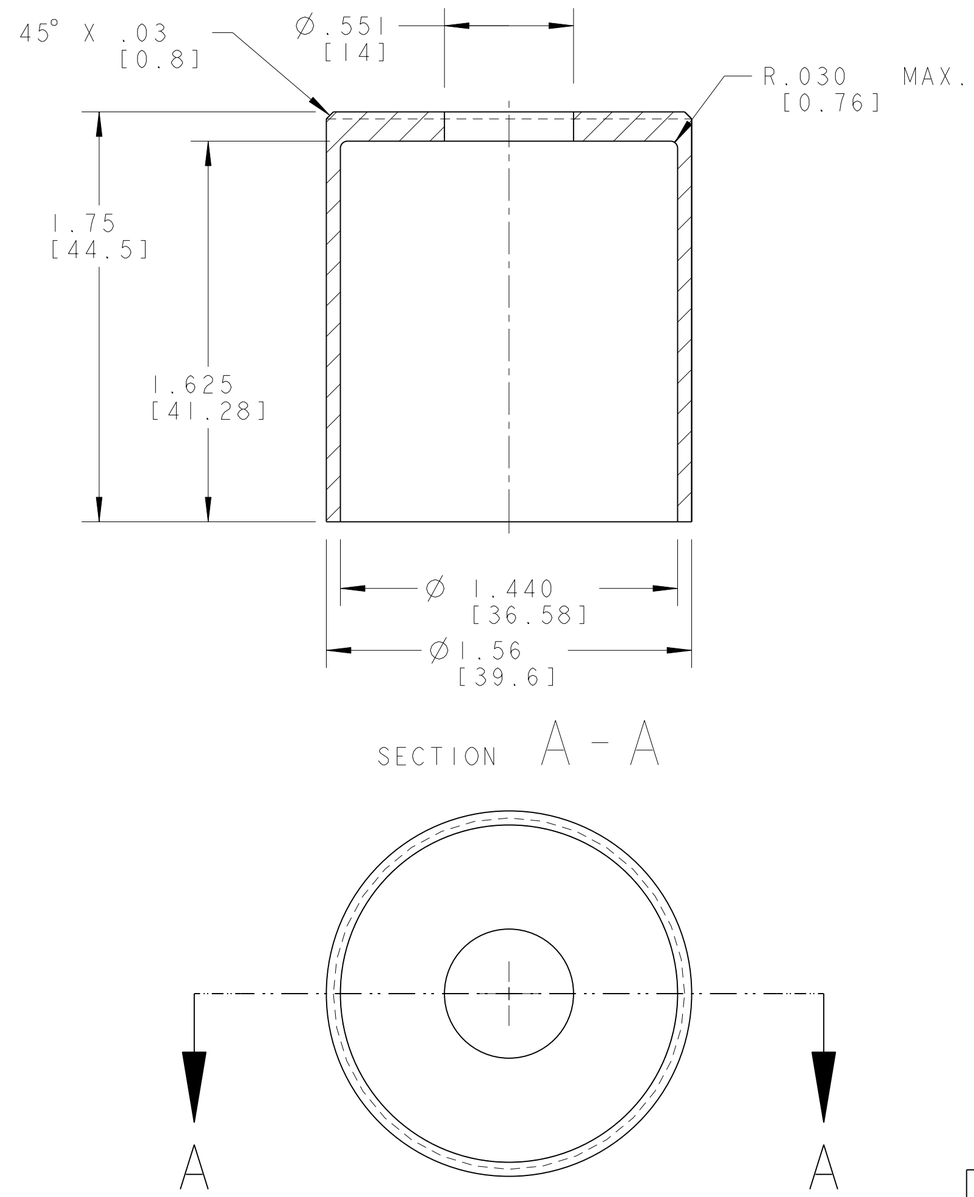


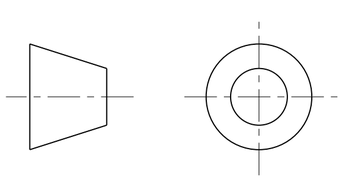

THIRD ANGLE PROJECTION

| REV | DWG | CHK | ZONE | DATE | CHANGES |
|---|---|---|---|---|---|
| A | ARH | DPO | | 9-16-02 | INITIAL RELEASE |

UNLESS OTHERWISE SPECIFIED

| TOLERANCES | | |
|---|---|---|
| | X.X ± 0.1 | FRAC. ± 1/64 |
| | X.XX ± 0.03 | Angles ± 1.00° |
| | X.XXX ± 0.010 | FINISH 125√(μin) |

DO NOT SCALE PRINT

THREADS ARE CLASS 2
CHAMFER ENDS OF ALL SCREW TREADS 30°
CUT ROUND, 1.5 THREAD RELIEF ON MACHINED THREADS
BREAK EDGES .016 MAX. ON MACHINED WORK
REMOVE BURRS, WELD SPLATTER & LOOSE SCALE
IN ACCORDANCE WITH ASME Y14.5M & B46.1

SHOP ORDERS

| | | | |
|---|---|---|---|
| SER NO. | - | | |
| ACCT NO. | | NO. REQD | DATE ISSD - |
| DEL TO | | | DATE REQD - |
| SURFACE TREATMT | - | | |
| IDENT METHOD | TAG | | |
| PROJECT NUMBER | N/A | | |
| PROJECT NAME | N/A | | |
| DWG BY | A. ZACHOSZCZ | | DATE 09-Oct-01 |
| CHK BY | Jon Zbasnik | | DATE 4-02-02 |
| APR BY | Jon Zbasnik | | DATE 4-02-02 |

ERNEST ORLANDO LAWRENCE
BERKELEY NATIONAL LABORATORY
UNIVERSITY OF CALIFORNIA - BERKELEY

LHC IR FEEDBOX
MAJOR ASSEMBLY
HTS LEAD WASHER GUIDE 1

| MICROFILMED: | DWG. TYPE | SHOWN ON | SCALE: 2/1 | DO NOT SCALE PRINTS |
|---|---|---|---|---|
| | PART | | SHEET 1 OF 1 | |
| PATENT CLEAR: | DESIGN ACCT. NO. | CATEGORY CODE | DWG. NO. 2511913 | SIZE / REV. A |
| | Z5LCE2 | LH2001 | | |

DWG. NO. 2511913 SIZE A REV. SH. 1

Dwg. File: 251191 Model File: HTS_LEAD_WASHER_GUIDE_2

Rev. 1/29/2000 J. R. Osborn