NOTES: UNLESS OTHERWISE SPECIFIED,

1. DIMENSIONS AND TOLERANCING PER ANSI Y14.5M-1982
   UNITS ARE IN INCHES UNLESS OTHERWISE SPECIFIED.

2. PROTECT FINISHED PART BY BAGGING OR SIMILAR METHOD TO
   PROTECT AND MAINTAIN CLEANLINESS DURING SHIPMENT
   AND STORAGE.

ITEM	PART NO	REQD	DESCRIPTION	MATERIAL
7	-	2	FLAT WASHER, MCMASTER-CARR, 92141A032	SS 304L
6	-	1	M12 HEX JAM NUT, MCMASTER-CARR 90710A130	18-8 SS
5	-	20	BELLEVILLE SPRING WASHER 9713K77	17-7 PH
4	-	2	SPHERICAL WASHER, MCMASTER-CARR 94007A042	-
3		1	M12 HEX NUT, MCMASTER-CARR 91828	-
2	251191	1	HTS LEAD WASHER GUIDE 1	AL 6061-T6
1	251190	1	HTS LEAD WASHER GUIDE 2	AL 6061-T6

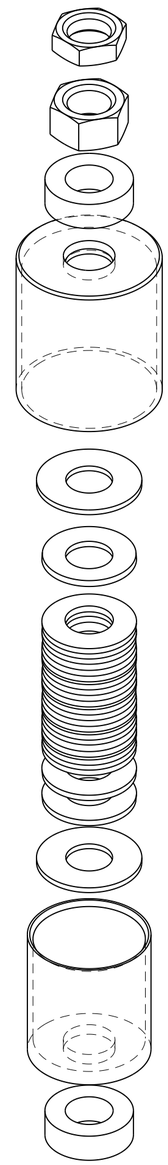

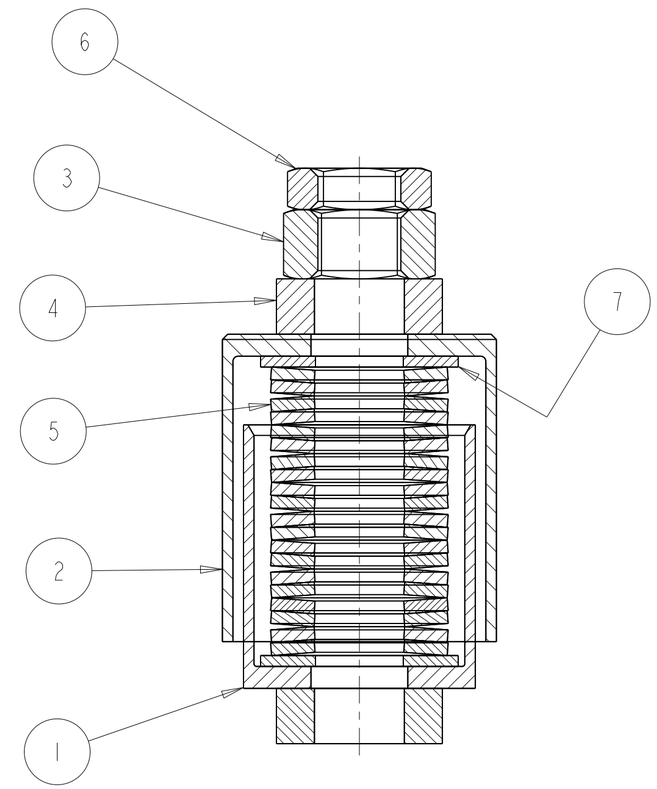

SECTION A-A
SCALE 1.500

THIRD ANGLE PROJECTION

REV	DWG	CHK	ZONE	DATE	CHANGES
A	ARH	DPO		9-16-02	INITIAL RELEASE

UNLESS OTHERWISE SPECIFIED

TOLERANCES		
	X.X ± 0.1	FRAC. ± 1/64
	X.XX ± 0.03	Angles ± 1.00°
	X.XXX ± 0.010	FINISH 125 √ (µin)

DO NOT SCALE PRINT

THREADS ARE CLASS 2
CHAMFER ENDS OF ALL SCREW TREADS 30°
CUT ROUND, 1.5 THREAD RELIEF ON MACHINED THREADS
BREAK EDGES .016 MAX. ON MACHINED WORK
REMOVE BURRS, WELD SPLATTER & LOOSE SCALE
IN ACCORDANCE WITH ASME Y14.5M & B46.1

SHOP ORDERS

SER NO.	-		
ACCT NO.		NO. REQD	DATE ISSD -
DEL TO			DATE REQD -
SURFACE TREATMT	-		
IDENT METHOD	TAG		
PROJECT NUMBER	N/A		
PROJECT NAME	N/A		
DWG BY	A. ZACHOSZCZ		DATE 11-Dec-01
CHK BY	Jon Zbasnik		DATE 4-02-02
APR BY	Jon Zbasnik		DATE 4-02-02

ERNEST ORLANDO LAWRENCE BERKELEY NATIONAL LABORATORY
UNIVERSITY OF CALIFORNIA - BERKELEY

LHC IR FEEDBOX
MAJOR ASSEMBLY
HTS LEAD WASHER GUIDE ASSY

MICROFILMED:	DWG. TYPE	SHOWN ON	SCALE: 0.800	DO NOT SCALE PRINTS
	ASSEM		SHEET 1 OF 1	
PATENT CLEAR:	DESIGN ACCT. NO.	CATEGORY CODE	DWG. NO.	SIZE / REV.
	Z5LCE2	LH2001	2511893	A

DWG. NO. 2511893 SIZE A REV. SH. 1

Dwg. File: 251189 Model File: 251189

Rev. 17-Mar-1999 J. C. Oakwell