ITEM	PART NO	REQD	DESCRIPTION	MATERIAL
1	251180	1	Q3 MOUNTING BRACKET	304L STAINLESS

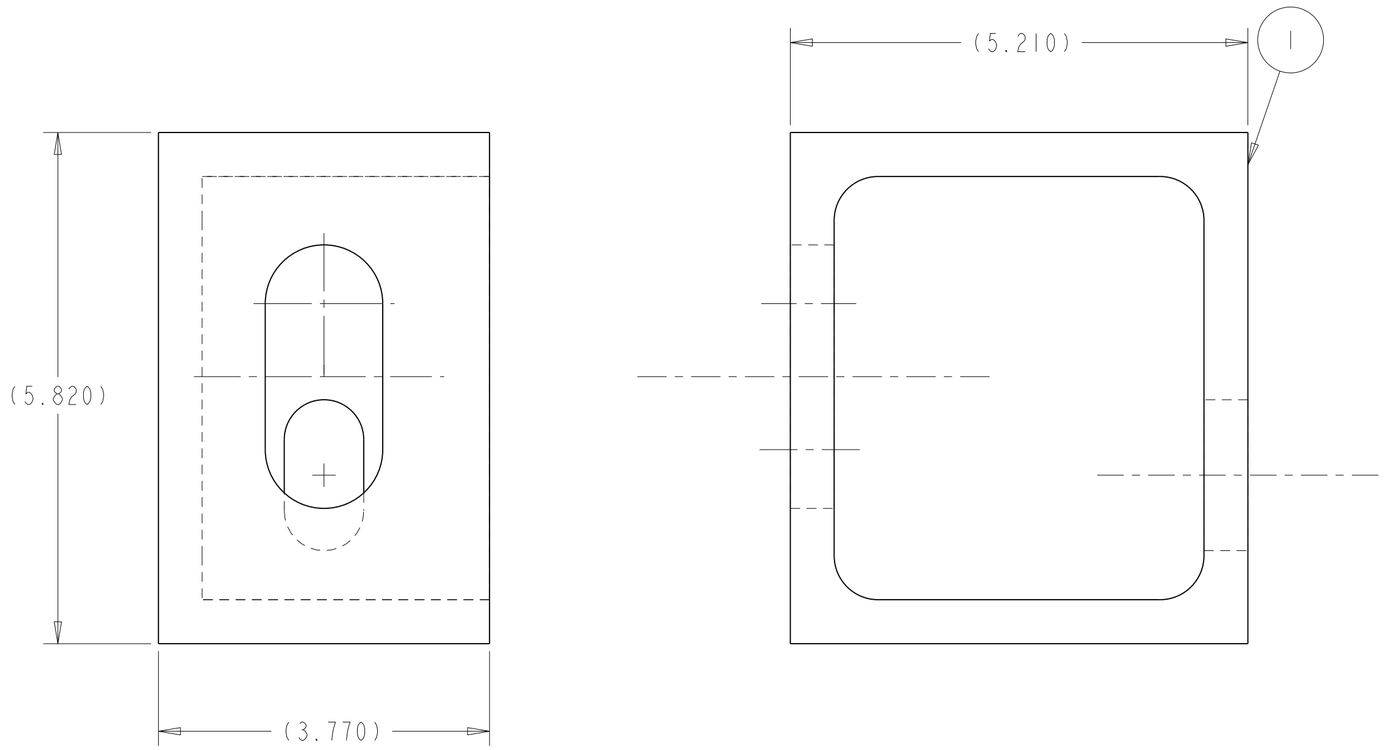

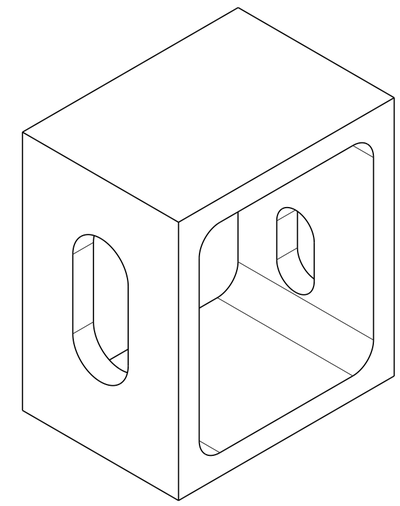

SCALE 0.500

NOTES: UNLESS OTHERWISE SPECIFIED,

1: DIMENSIONS AND TOLERANCING PER ANSI Y14.5M-1982}}
UNITS ARE IN INCHES UNLESS OTHERWISE SPECIFIED.

2. PROTECT FINISHED PART BY BAGGING OR SIMILAR METHOD PROTECT AND MAINTAIN CLEANLINESS DURING SHIPMENT AND STORAGE.

7. ESTIMATED WEIGHT = 16 LBS

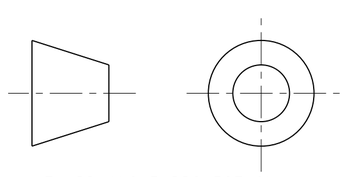

THIRD ANGLE PROJECTION

REV	DWG	CHK	ZONE	DATE	CHANGES
A	MJK	DPO		9/11/02	INITIAL RELEASE

UNLESS OTHERWISE SPECIFIED

TOLERANCES		
	X.X ± 0.1	FRAC. ± 1/64
	X.XX ± 0.03	Angles ± 1.00°
	X.XXX ± 0.010	FINISH 125 (μin)

DO NOT SCALE PRINT

THREADS ARE CLASS 2
CHAMFER ENDS OF ALL SCREW TREADS 30°
CUT ROUND, 1.5 THREAD RELIEF ON MACHINED THREADS
BREAK EDGES .016 MAX. ON MACHINED WORK
REMOVE BURRS, WELD SPLATTER & LOOSE SCALE
IN ACCORDANCE WITH ASME Y14.5M & B46.1

SHOP ORDERS

SER NO.	-		
ACCT NO.	NO. REQD	DATE ISSD	-
DEL TO		DATE REQD	-
SURFACE TREATMT	-		
IDENT METHOD	TAG		
PROJECT NUMBER	N/A		
PROJECT NAME	N/A		
DWG BY	KNOLLS	DATE	30-Aug-01
CHK BY	Jon Zbasnik	DATE	4/2/02
APR BY	Jon Zbasnik	DATE	4/2/02

ERNEST ORLANDO LAWRENCE BERKELEY NATIONAL LABORATORY
UNIVERSITY OF CALIFORNIA - BERKELEY

LHC IR FEEDBOX
MAJOR ASSEMBLY
Q3 MOUNTING BRACKET KIT

MICROFILMED:	DWG. TYPE	SHOWN ON	SCALE: 0.750	DO NOT SCALE PRINTS
	ASSEM		SHEET 1 OF 1	
PATENT CLEAR:	DESIGN ACCT. NO.	CATEGORY CODE	DWG. NO. SIZE	REV.
	Z5LCE2	LH2001	2511793	A

DWG. NO. 2511793 SIZE REV. A SH. 1

Dwg. File: 251179 Model File: 251179