DWG. NO.	SIZE	REV.	SH.
2511644	A	1	

ITEM	PART NO	REQD	DESCRIPTION	MATERIAL
12	3/8-16 UNC NUT	3	3/8-16UNC HEXNUT	
11	3/8 WASHER	3	3/8 ID FLAT WASHER	304 CRES
10	251469	2	LARGE INSULATOR, 600 AMP	Nema G10
9	251468	2	600 AMP LEAD (SEE SHEET 2)	-
8	251466	1	INSTRUMENTATION FEED THROUGH	-
7	251462	1	BAFFLE SPACER, SEPARATOR	Nema G10
6	251461	2	BAFFLE 600 AMP VC LEAD ASSY	-
5	251460	1	BAFFLE SPACER, FLANGE	Nema G10
4	251459	1	BAFFLE MOUNTING THREADED ROD	-
3	251458	1	8 INCH VAPOR COOLED LEAD FLANGE	304 CRES
2	24C325	1	THERMAL BAFFLE	Nema G-10
1	-1410-1-14ST	2	SWAGELOK SAE MALE CONNECTOR (7/8"-TUBE)	-

NOTE:
USE ALL APPLICABLE SPECIFICATIONS
FROM DRAWING 24C353

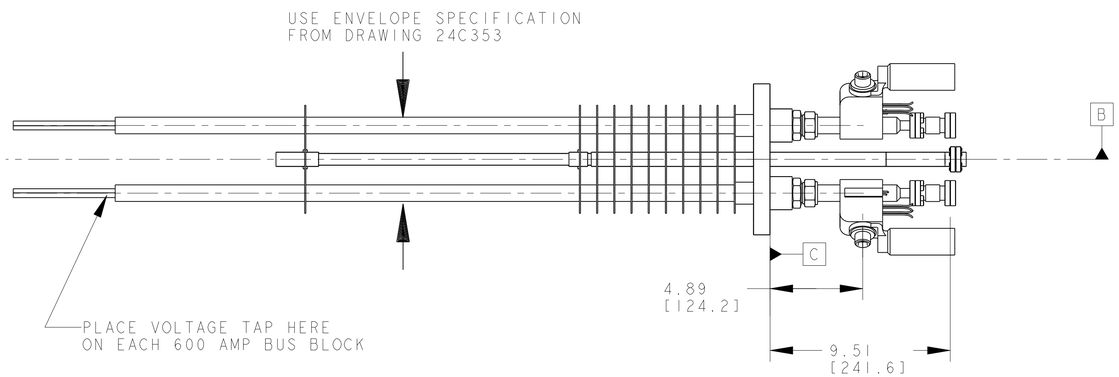

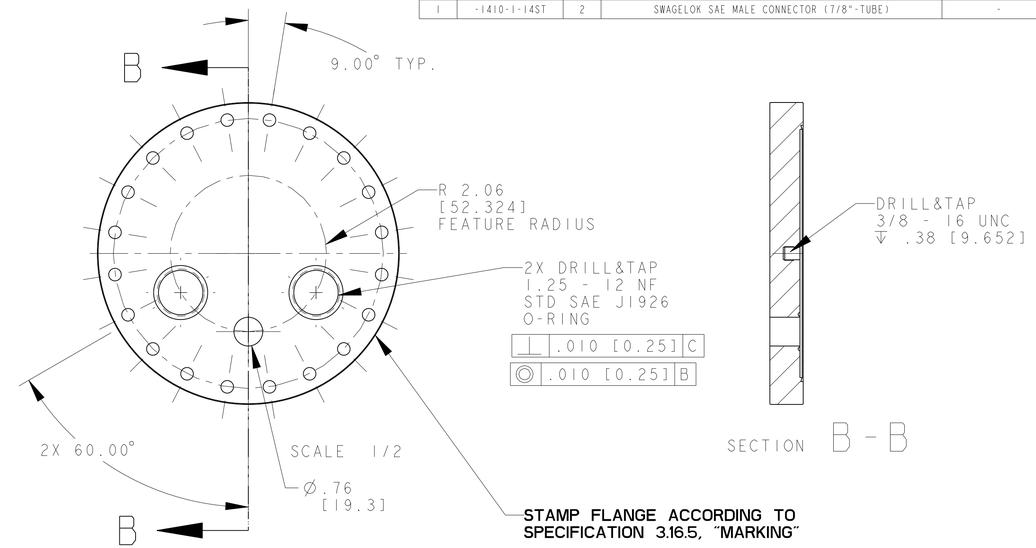

ITEM 3, STANDARD 8" CONFLAT FLANGE

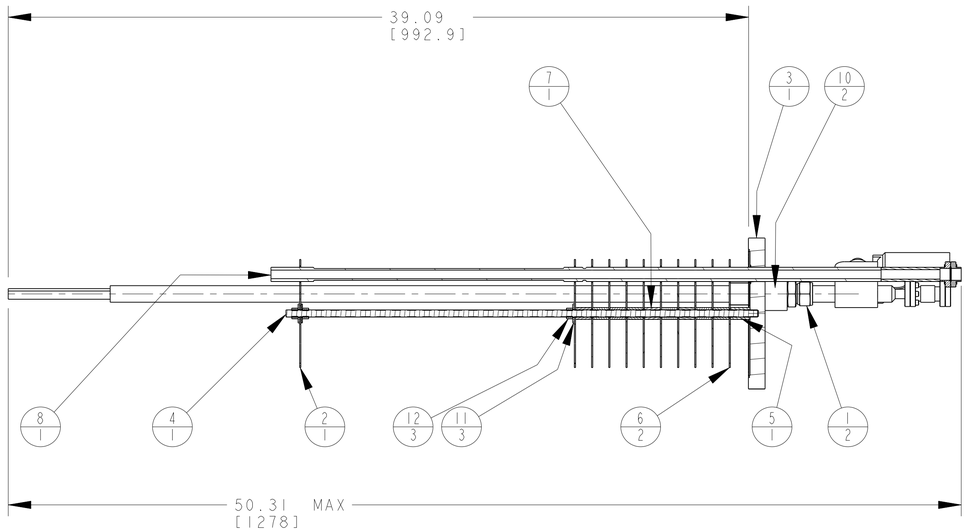

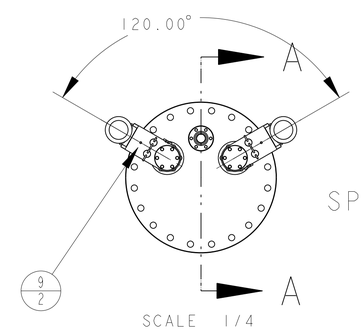

SPEC-CONTROL DRAWING
8/20/02

SECTION A - A

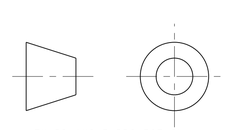

THIRD ANGLE PROJECTION

REV	DWG	CHK	ZONE	DATE	CHANGES
A	SB	JER		10/03/02	INITIAL RELEASE

UNLESS OTHERWISE SPECIFIED
TOLERANCES: X.X ± 0.1 FRAC. ± 1/64; X.XX ± 0.03 Angles ± 1.00°; X.XXX ± 0.010 FINISH 125 √RMS
DO NOT SCALE PRINT
THREADS ARE CLASS 2
CHAMFER ENDS OF ALL SCREW THREADS 30°
CUT ROUND, 1.5 THREAD RELIEF ON MACHINED THREADS
BREAK EDGES .016 MAX. ON MACHINED WORK
REMOVE BURRS, WELD SPLATTER & LOOSE SCALE
IN ACCORDANCE WITH ASME Y14.5M & B46.1

SHOP ORDERS
ACCT NO. / NO. REQD
DEL TO
SURFACE TREATMT -
IDENT METHOD TAG
PROJECT NUMBER N/A
PROJECT NAME N/A
DWG BY Unknown DATE 02-Oct-02
CHK BY None DATE 04-APR-02
APR BY None DATE 04-APR-02
SER NO. -
DATE ISSD -
DATE REQD -

ERNEST ORLANDO LAWRENCE
BERKELEY NATIONAL LABORATORY
UNIVERSITY OF CALIFORNIA - BERKELEY

LHC IR Feed Box
ELECTRICAL
600 AMP, 2-LEAD CLUSTER ASSEMBLY

MICROFILMED: | DWG. TYPE: ASSEM | SHOWN ON: - | SCALE: 11/100 | DO NOT SCALE PRINTS
SHEET 1 OF 1
PATENT CLEAR: | DESIGN ACCT. NO.: 4540-90 | CATEGORY CODE: LH2000 | DWG. NO.: 2511644 | SIZE | REV.: A