DWG. NO.	SIZE	REV.	SH.
2511564	A	1	

ITEM	PART NO	REQD	DESCRIPTION	MATERIAL
8	251330	6	BEVELED WASHER	SS 304L
7	-	12	M12 HEX JAM NUT, MCMASTER-CARR 90710A130	18-8 SS
6	251188	1	HTS LEAD INSULATOR 2	NEMA G10
5	251187	1	INSULATOR SLEEVE 1	NEMA G10
4	251189	6	HTS LEAD WASHER GUIDE ASSY	-
3	251800	1	SEAL	PEEK
2	251704	1	HTS LEAD BAFFLE ASSEMBLY	-
1	251192	1	HTS LEAD	-

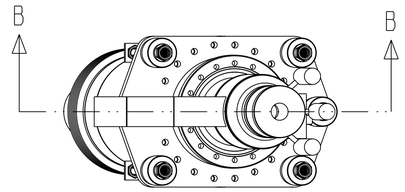

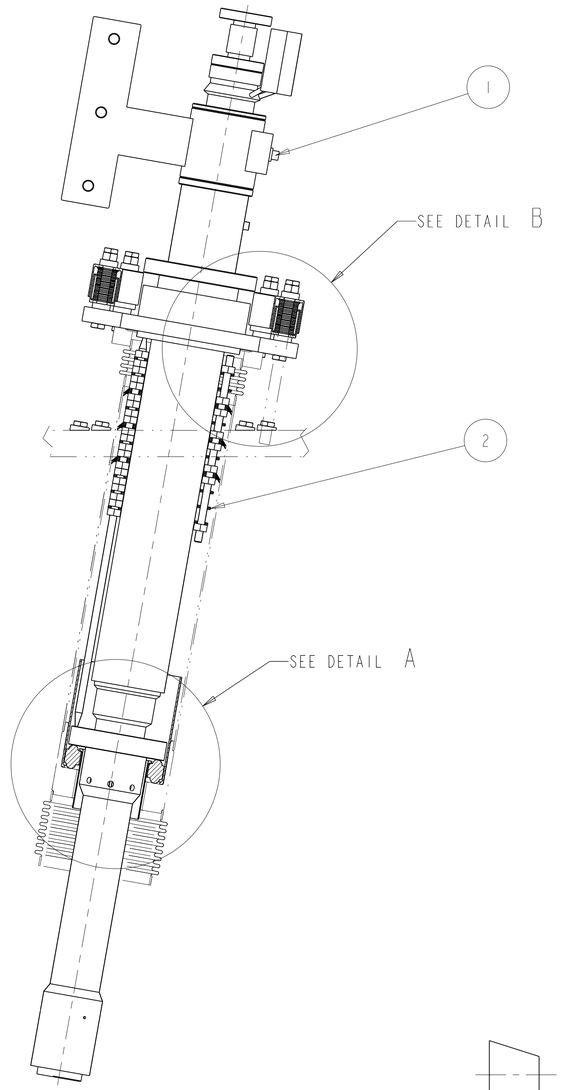

SECTION B-B

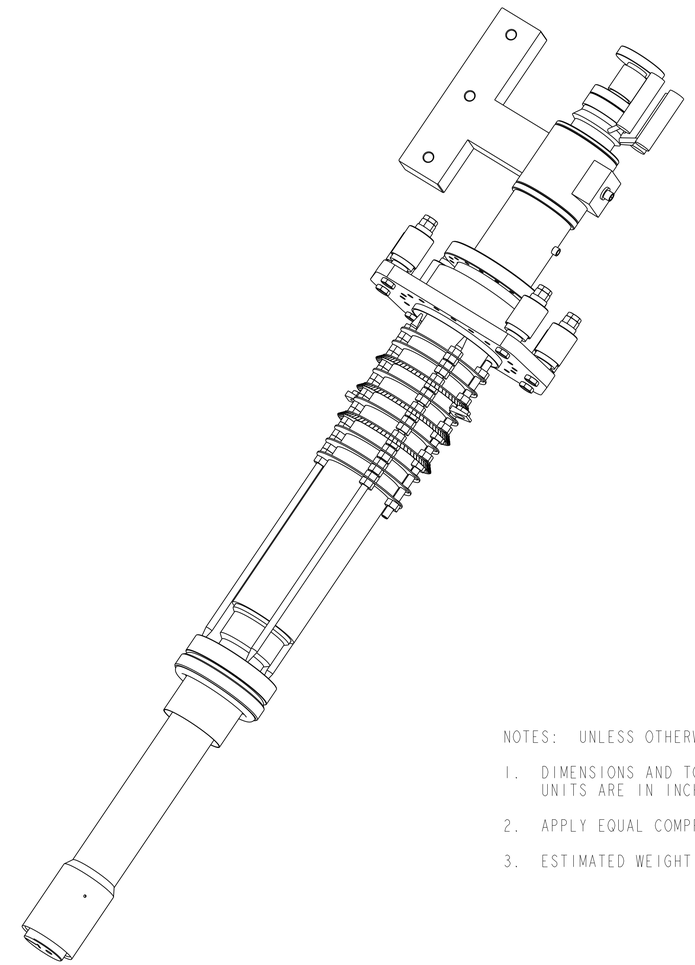

NOTES: UNLESS OTHERWISE SPECIFIED,

1. DIMENSIONS AND TOLERANCING PER ANSI Y14.5M-1982
   UNITS ARE IN INCHES UNLESS OTHERWISE SPECIFIED.
2. APPLY EQUAL COMPRESSION TO BELLEVILLE SPRINGS ON ALL RODS.
3. ESTIMATED WEIGHT = 158 LBS

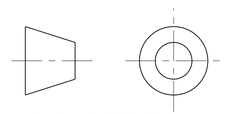

THIRD ANGLE PROJECTION

REV	DWG	CHK	ZONE	DATE	CHANGES
A	RLM	DPO		10-4-02	INITIAL RELEASE

UNLESS OTHERWISE SPECIFIED

TOLERANCES		
	X.X ± 0.1	FRAC. ± 1/64
	X.XX ± 0.03	Angles ± 1.00°
	X.XXX ± 0.010	FINISH 125 √(μin)

DO NOT SCALE PRINT

THREADS ARE CLASS 2
CHAMFER ENDS OF ALL SCREW TREADS 30°
CUT ROUND, 1.5 THREAD RELIEF ON MACHINED THREADS
BREAK EDGES .016 MAX. ON MACHINED WORK
REMOVE BURRS, WELD SPLATTER & LOOSE SCALE
IN ACCORDANCE WITH ASME Y14.5M & B46.1

SHOP ORDERS

ACCT NO.	NO. REQD	SER NO.	-
DEL TO		DATE ISSD	-
		DATE REQD	-
SURFACE TREATMT	-		
IDENT METHOD	TAG		
PROJECT NUMBER	N/A		
PROJECT NAME	N/A		
DWG BY	A. ZACHOSZCZ	DATE	25-Oct-01
CHK BY	Jon Zbasnik	DATE	21-Apr-02
APR BY	Jon Zbasnik	DATE	21-Apr-02

ERNEST ORLANDO LAWRENCE
BERKELEY NATIONAL LABORATORY
UNIVERSITY OF CALIFORNIA - BERKELEY

LHC IR FEEDBOX
MAJOR ASSEMBLY
PIRELLI HTS LEAD KIT

MICROFILMED:	DWG. TYPE	SHOWN ON	SCALE: 0.250	DO NOT SCALE PRINTS
	ASSEM		SHEET 1 OF 2	
PATENT CLEAR:	DESIGN ACCT. NO.	CATEGORY CODE	DWG. NO.	SIZE / REV.
	Z5LCE2	LH2001	2511564	A

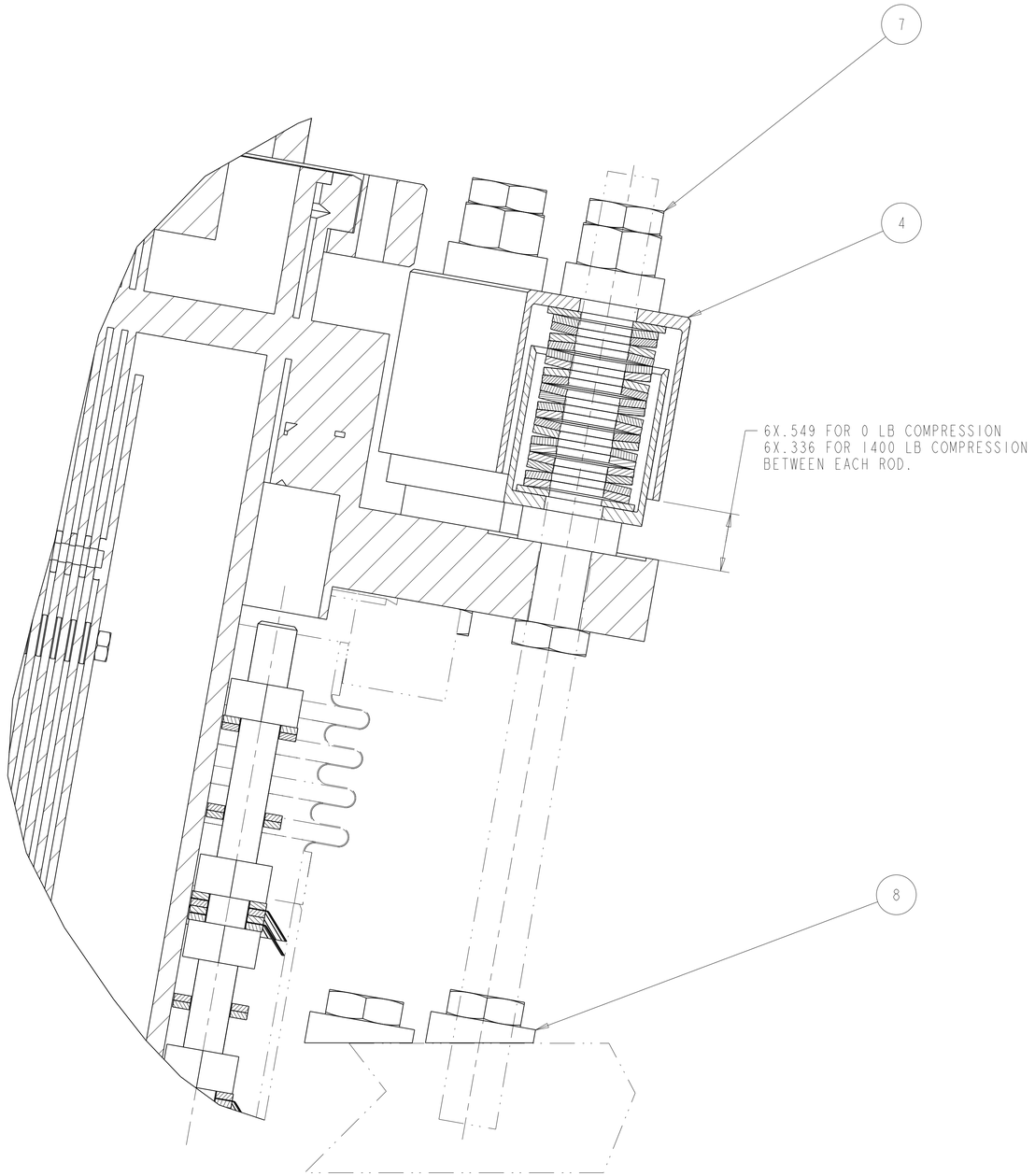

DETAIL B
SCALE 1.500

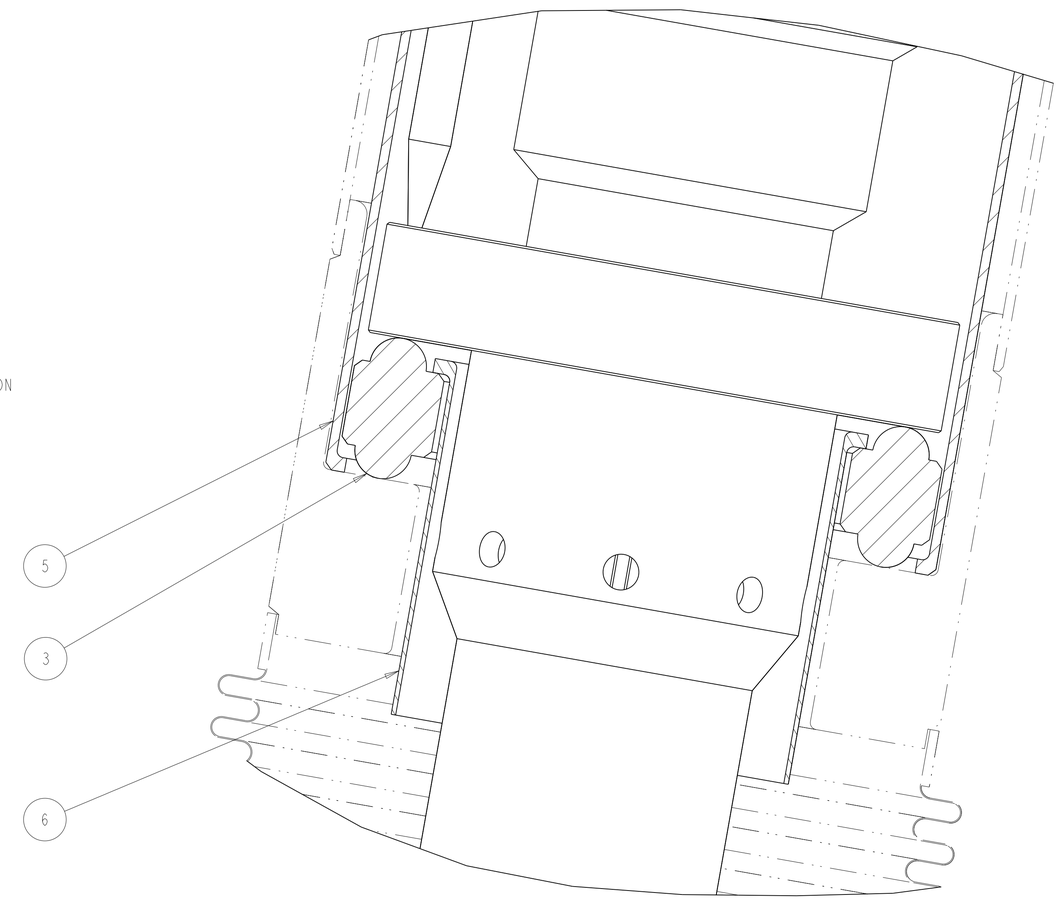

DETAIL A
SCALE 1.500

ERNEST ORLANDO LAWRENCE
BERKELEY NATIONAL LABORATORY
UNIVERSITY OF CALIFORNIA - BERKELEY

LHC IR FEEDBOX
MAJOR ASSEMBLY
PIRELLI HTS LEAD KIT

MICROFILMED:	DWG. TYPE ASSEM	SHOWN ON	SCALE: 0.250	DO NOT SCALE PRINTS
			SHEET 2 OF 2	
PATENT CLEAR:	DESIGN ACCT. NO. Z5LCE2	CATEGORY CODE LH2001	DWG. NO. 2511564	SIZE / REV. A