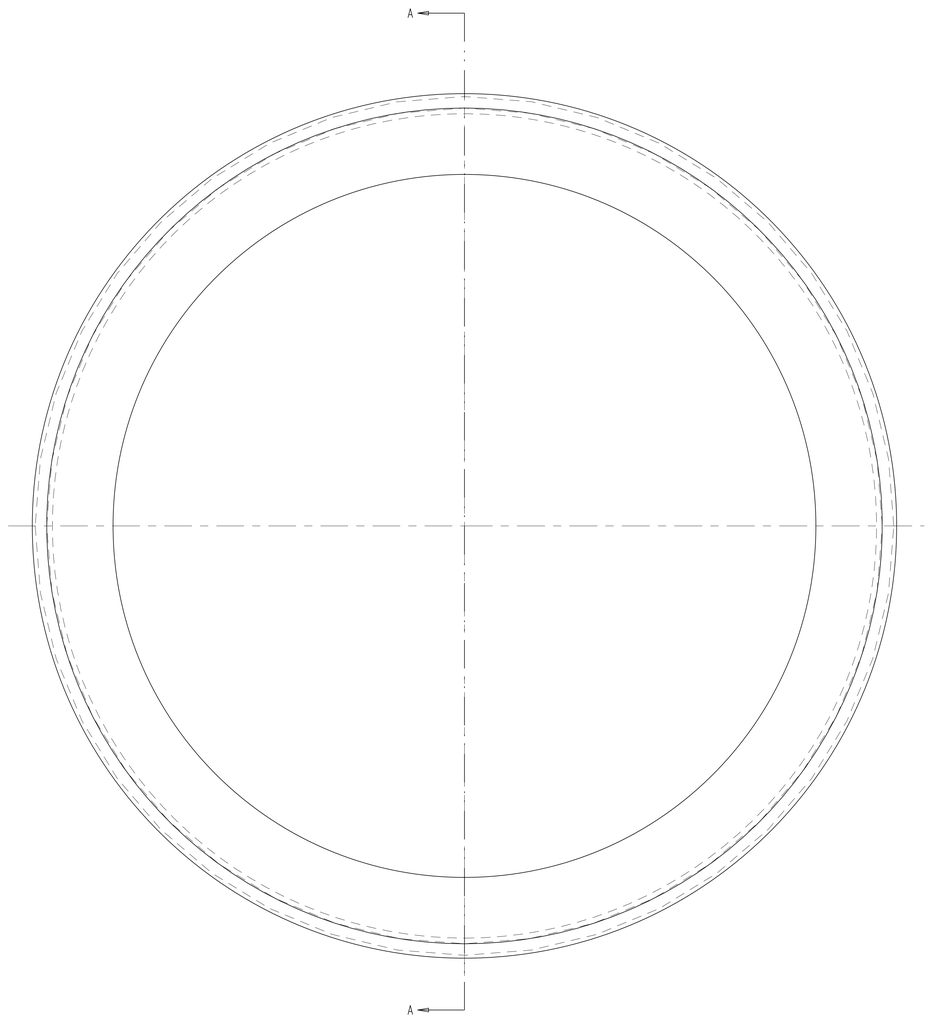

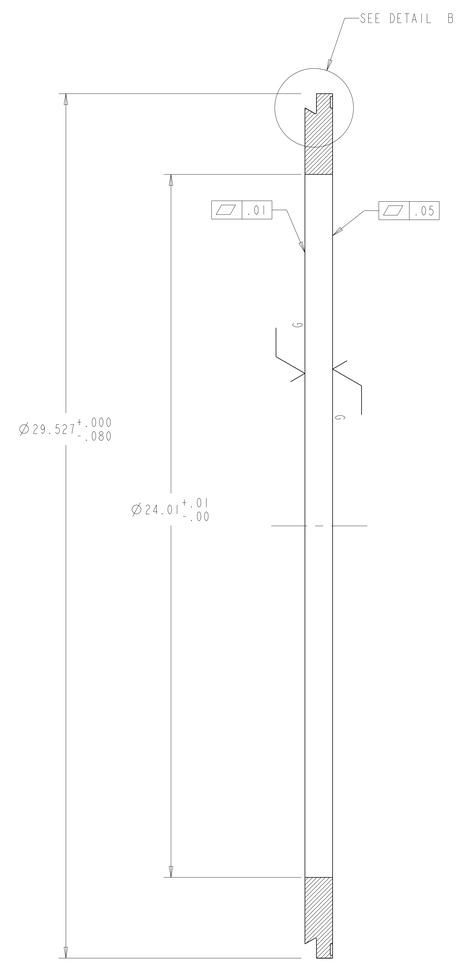

SECTION A-A

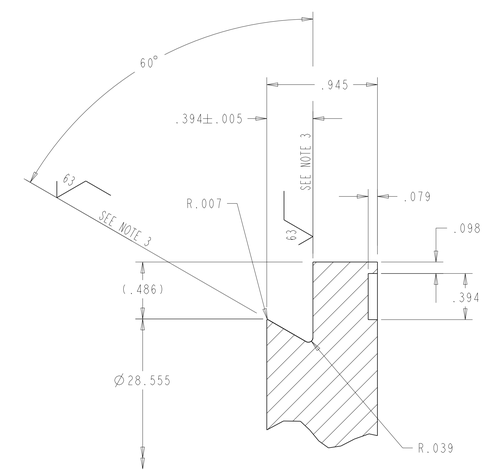

DETAIL B
SCALE 2/1

NOTES: UNLESS OTHERWISE SPECIFIED,

1. BLANCHARD GRIND PLATE BOTH SIDES BEFORE MACHINING, MINIMUM CLEANUP.
2. DIMENSIONS AND TOLERANCING PER ANSI Y14.5M-1982 UNITS ARE IN INCHES UNLESS OTHERWISE SPECIFIED.
3. FINISHED SURFACE IS A GASKET SURFACE. SCRATCHES, PITS, RADIAL SCRIBE MARKS, OR OTHER SUFRFACE IMPERFECTIONS ARE NOT PERMISSABLE.
4. USE OF SULFUR OR SILICONE BEARING OILS, LUBRICANTS, OR COOLANTS ARE STRICTLY PROHIBITED
5. USE OF RESIN OR RUBBER BONDED ADRASIVES UNDER POWER IS STRICTLY PROHIBITED. USE VITREOUS BONDED ABRASIVES ONLY.
6. CLEAN AFTER MACHINING PER VENDOR SPECIFICATION; SUBJECT TO LBNL APPROVAL.
7. PROTECT FINISHED PART BY BAGGING OR SIMILAR METHOD TO PROTECT AND MAINTAIN CLEANLINESS DURING SHIPMENT AND STORAGE.
6. ESTIMATED WEIGHT = 55 LBS

THIRD ANGLE PROJECTION

REV	DWG	CHK	ZONE	DATE	CHANGES
A	RLM	DPO		10/4/02	INITIAL RELEASE

UNLESS OTHERWISE SPECIFIED
TOLERANCES: X.X ± 0.1 FRAC. ± 1/64; X.XX ± 0.03 Angles ± 1.00°; X.XXX ± 0.010 FINISH 125/ 1/64
DO NOT SCALE PRINT
THREADS ARE CLASS 2
CHAMFER ENDS OF ALL SCREW TREADS 30°
CUT ROUND, 1.5 THREAD RELIEF ON MACHINED THREADS
BREAK EDGES .016 MAX. ON MACHINED WORK
REMOVE BURRS, WELD SPLATTER & LOOSE SCALE
IN ACCORDANCE WITH ASME Y14.5M & B46.1

SHOP ORDERS
SER NO. -
ACCT NO. | NO. REQD | DATE ISSD -
DEL TO | DATE REQD -
SURFACE TREATMT -
IDENT METHOD TAG
PROJECT NUMBER N/A
PROJECT NAME N/A
DWG BY A. ZACHOSZCZ DATE 25-Mar-02
CHK BY M. KNOLLS DATE 25-MAR-02
APR BY JON ZBASNIK DATE 25-MAR-02

DESCRIPTION	MATERIAL	MAT. LOCATION
1" PLATE, HOT ROLLED, ANNEALED,	304L SS	-

ERNEST ORLANDO LAWRENCE BERKELEY NATIONAL LABORATORY
UNIVERSITY OF CALIFORNIA - BERKELEY

LHC IR FEEDBOX
VACUUM
DI FLANGE

MICROFILMED: | DWG. TYPE PART | SHOWN ON - | SCALE: 1/2 | DO NOT SCALE PRINTS
PATENT CLEAR: | DESIGN ACCT. NO. Z5LCE2 | CATEGORY CODE LH2002 | DWG. NO. 2511316 | SIZE | REV. A
SHEET 1 OF 1

DWG. NO. 2511316 SIZE A REV. 1