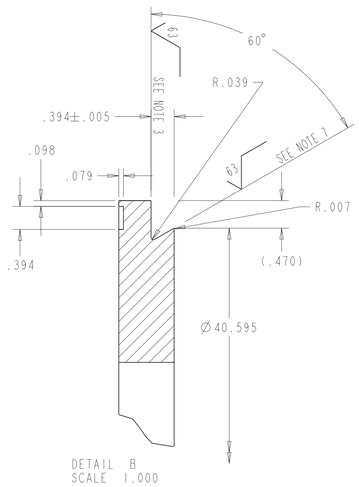

DETAIL B
SCALE 1.000

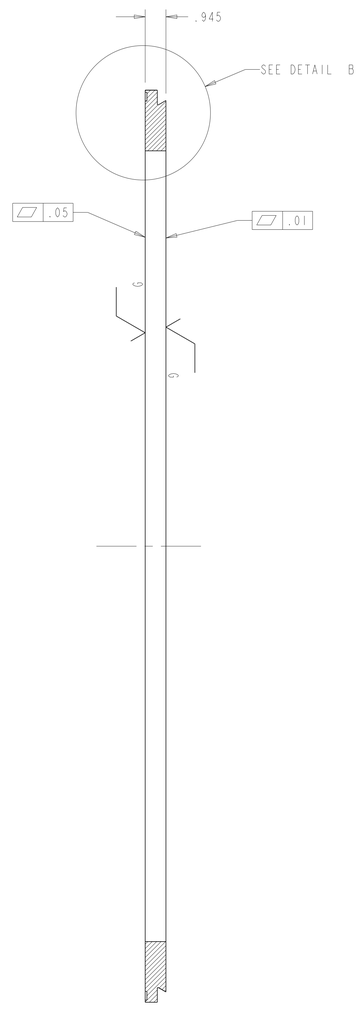

SECTION A-A

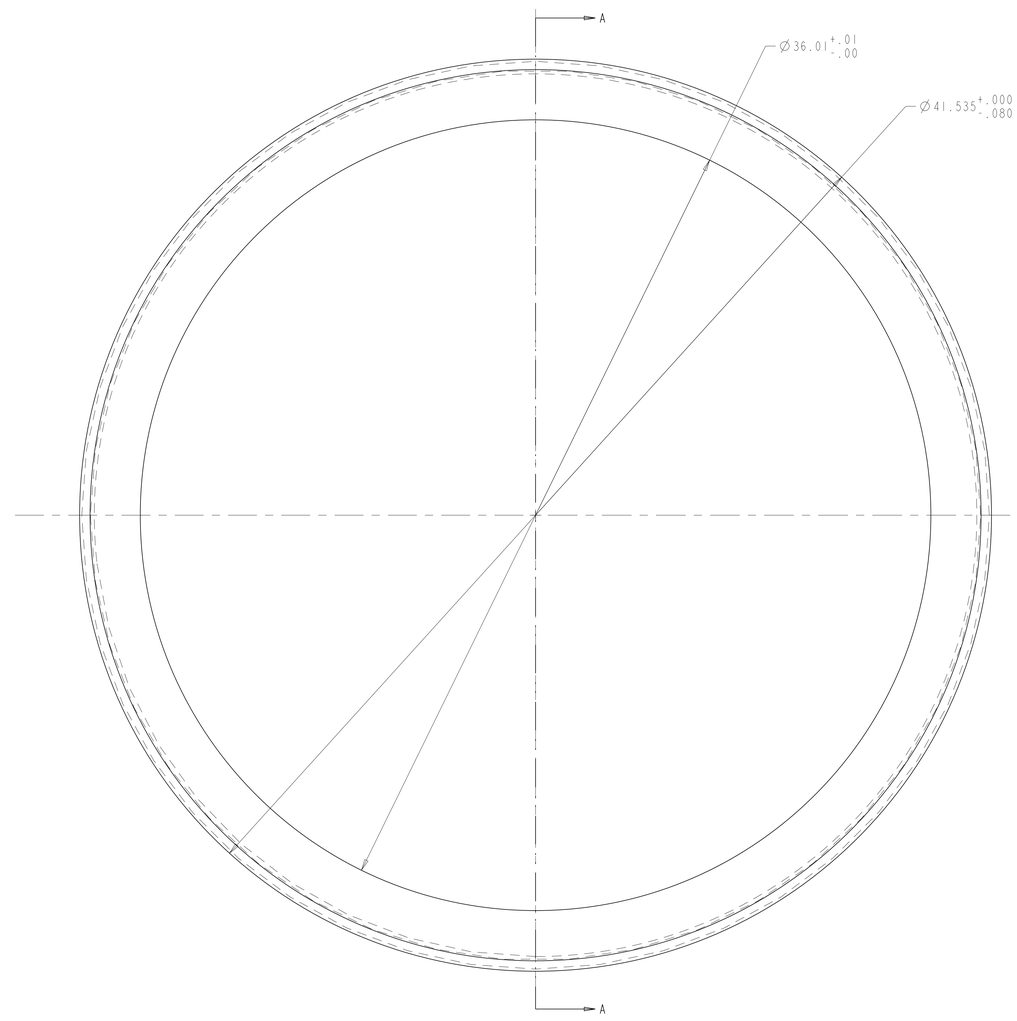

NOTES: UNLESS OTHERWISE SPECIFIED,

1. BLANCHARD GRIND PLATE BOTH SIDES BEFORE MACHINING. MINIMUM CLEANUP.
2. DIMENSIONS AND TOLERANCING PER ANSI Y14.5M-1982 UNITS ARE IN INCHES UNLESS OTHERWISE SPECIFIED.
3. FINISHED SURFACE IS A GASKET SURFACE. SCRATCHES, PITS, RADIAL SCRIBE MARKS, OR OTHER SURFACE IMPERFECTIONS NOT PERMISSABLE.
4. USE OF SULFUR OR SILICONE BEARING OILS, LUBRICANTS, OR COOLANTS ARE STRICTLY PROHIBITED
5. USE OF RESIN OR RUBBER BONDED ADRASIVES UNDER POWER IS STRICTLY PROHIBITED. USE VITREOUS BONDED ABRASIVES ONLY.
6. THIS IS A HIGH VACUUM COMPONENET. CLEAN AFTER MACHINING USING A NON-ETCHING ALKALI BASED SOLUTION.
7. PROTECT FINISHED PART BY BAGGING OR SIMILAR METHOD TO PROTECT AND MAINTAIN CLEANLINESS DURING SHIPMENT AND STORAGE.
8. ESTIMATED WEIGHT = 81 LBS

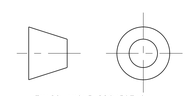

THIRD ANGLE PROJECTION

REV	DWG	CHK	ZONE	DATE	CHANGES
A	RLM	DPO		10/4/02	INITIAL RELEASE

UNLESS OTHERWISE SPECIFIED

TOLERANCES		
	X.X ± 0.1	FRAC. ± 1/64
	X.XX ± 0.03	Angles ± 1.00°
	X.XXX ± 0.010	FINISH 125/

DO NOT SCALE PRINT

THREADS ARE CLASS 2
CHAMFER ENDS OF ALL SCREW TREADS 30°
CUT ROUND, 1.5 THREAD RELIEF ON MACHINED THREADS
BREAK EDGES .016 MAX. ON MACHINED WORK
REMOVE BURRS, WELD SPLATTER & LOOSE SCALE
IN ACCORDANCE WITH ASME Y14.5M & B46.1

SHOP ORDERS

ACCT NO.	NO. REQD	SER NO.	-
DEL TO		DATE ISSD	-
		DATE REQD	-
SURFACE TREATMT	-		
IDENT METHOD	TAG		
PROJECT NUMBER	N/A		
PROJECT NAME	N/A		
DWG BY	M. KNOLLS	DATE	10-Aug-01
CHK BY	Jon Zbasnik	DATE	15-FEB-02
APR BY	Jon Zbasnik	DATE	15-FEB-02

DESCRIPTION	MATERIAL	MAT. LOCATION
PLATE 1" STOCK, HOT ROLLED, ANNEALED, PCKLED, ASTM AS240	304L SS	-

ERNEST ORLANDO LAWRENCE
BERKELEY NATIONAL LABORATORY
UNIVERSITY OF CALIFORNIA - BERKELEY

LHC IR FEEDBOX
VACUUM
Q3 FLANGE

MICROFILMED:	DWG. TYPE	SHOWN ON	SCALE: 0.375	DO NOT SCALE PRINTS
	PART	.	SHEET 1 OF 1	
PATENT CLEAR:	DESIGN ACCT. NO.	CATEGORY CODE	DWG. NO.	SIZE / REV.
	Z5LCE2	LH2002	2511276	A

DWG. NO. 2511276 SIZE A REV. 1