DWG. NO.	SIZE	REV.	SH.
2510754	A	1	

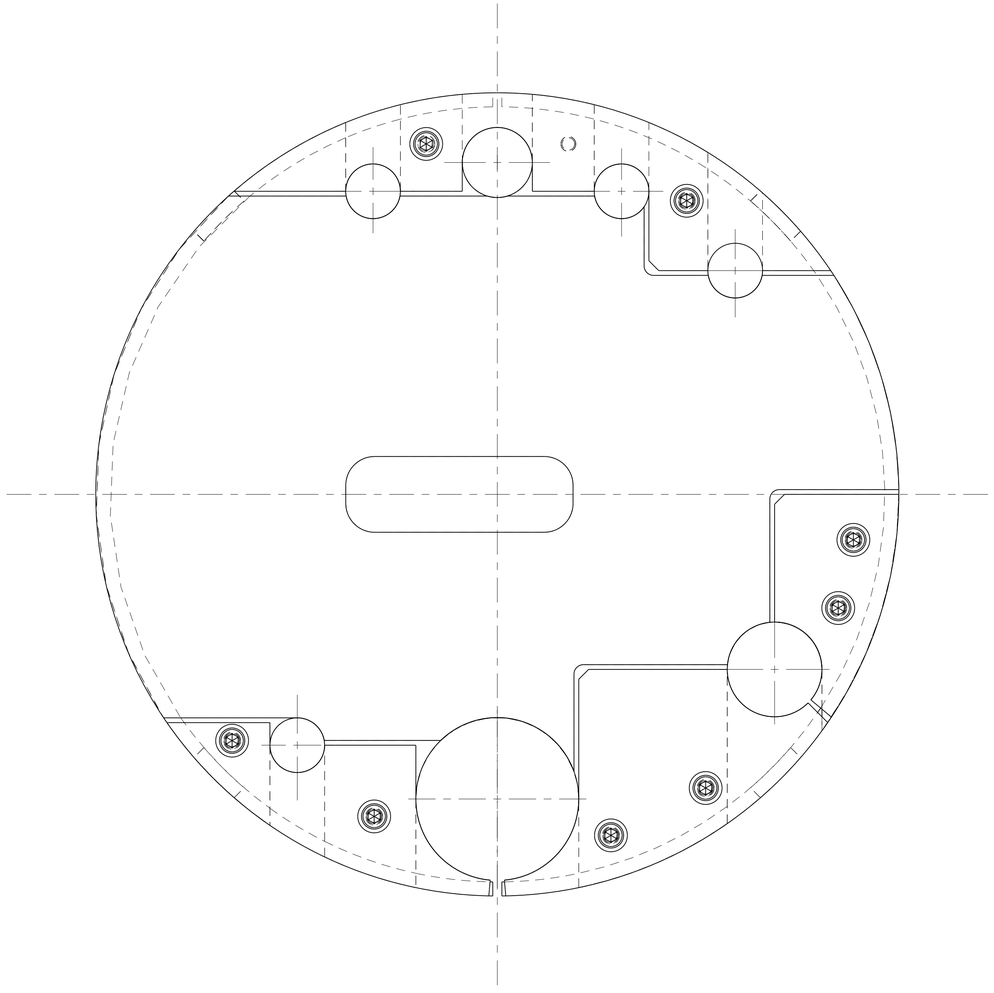

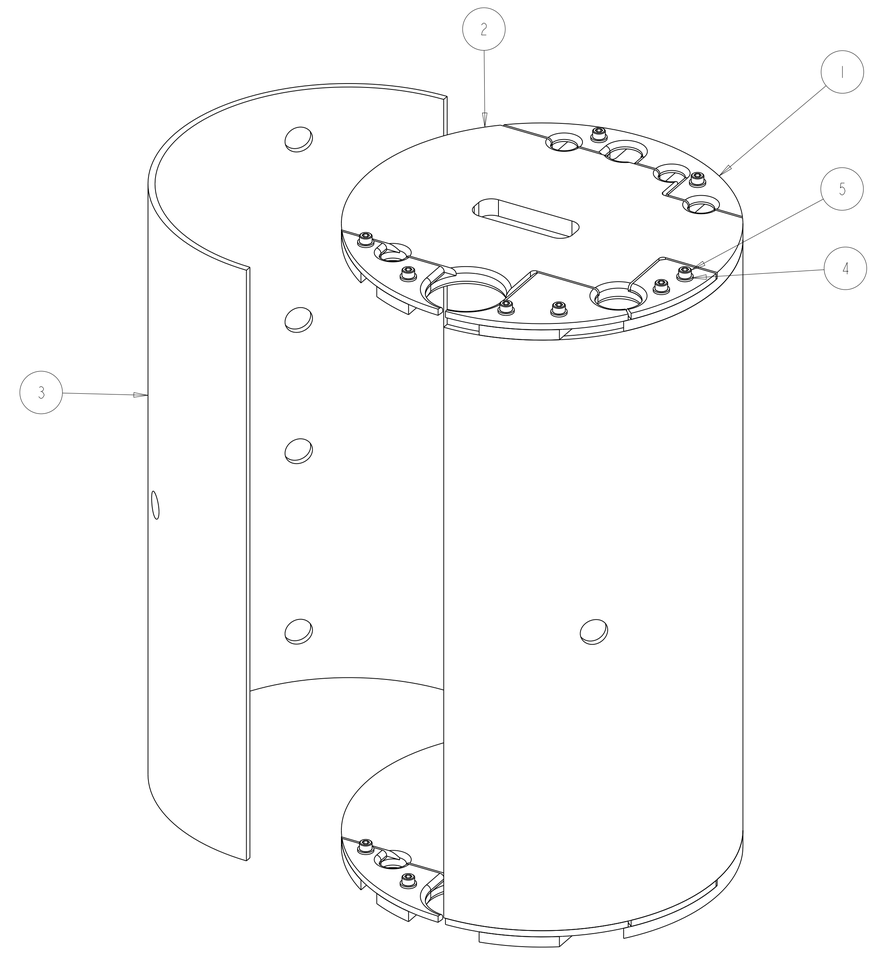

SCALE 0.500

ITEM	PART NO	DESCRIPTION	MATERIAL	REQD	DESIGNER	MAT Location
5	-	SCH, M5X.8, 15LG, SILVER PLATED	SS 18-8	16		
4	-	WASHER, M5	SS	16		
3	251449	QRL ENCLOSURE, LONG, IP 1, 2&8	NEMA G10	2	R LA MANTIA	
2	251374	SUPPORT PLATE	NEMA G10	2	R LA MANTIA	
1	251372	RETAINER PLATE ASSEMBLY	NEMA G10	2	R LA MANTIA	

THIRD ANGLE PROJECTION

REV	DWG	CHK	ZONE	DATE	CHANGES
A	RLM	DPO		10-4-02	INITIAL RELEASE

UNLESS OTHERWISE SPECIFIED

TOLERANCES: X.X ± 0.1 — FRAC. ± 1/64; X.XX ± 0.03 — Angles ± 1.00°; X.XXX ± 0.010 — FINISH 125 √(μin)

DO NOT SCALE PRINT

THREADS ARE CLASS 2

CHAMFER ENDS OF ALL SCREW TREADS 30°

CUT ROUND, 1.5 THREAD RELIEF ON MACHINED THREADS

BREAK EDGES .016 MAX. ON MACHINED WORK

REMOVE BURRS, WELD SPLATTER & LOOSE SCALE

IN ACCORDANCE WITH ASME Y14.5M & B46.1

SHOP ORDERS

SER NO.	-		
ACCT NO.	NO. REQD	DATE ISSD	-
DEL TO		DATE REQD	-
SURFACE TREATMT	-		
IDENT METHOD	TAG		
PROJECT NUMBER	N/A		
PROJECT NAME	N/A		
DWG BY	R LA MANTIA	DATE	18-July-02
CHK BY	D OSHATZ	DATE	19-Sep-02
APR BY	D OSHATZ	DATE	19-Sep-02

ERNEST ORLANDO LAWRENCE BERKELEY NATIONAL LABORATORY
UNIVERSITY OF CALIFORNIA - BERKELEY

LHC IR FEEDBOX
CRYOGENICS
SUPPORT, QQSD, DFBXC/DFBXG

MICROFILMED:	DWG. TYPE	SHOWN ON	SCALE: 1.000	DO NOT SCALE PRINTS
	ASSEM	-	SHEET 1 OF 1	
PATENT CLEAR:	DESIGN ACCT. NO.	CATEGORY CODE	DWG. NO.	SIZE / REV.
	Z5LCE2	LH2003	2510754	A