DWG. NO.	SIZE	REV.	SH.
24C3534	A	1	

NOTES: (UNLESS OTHERWISE SPECIFIED)

1. ALL DIMENSIONS ARE IN INCHES [MILLIMETERS].
2. ITEMS 1, 7 AND 8 ARE SEALED WITH EPOXY AS NEEDED

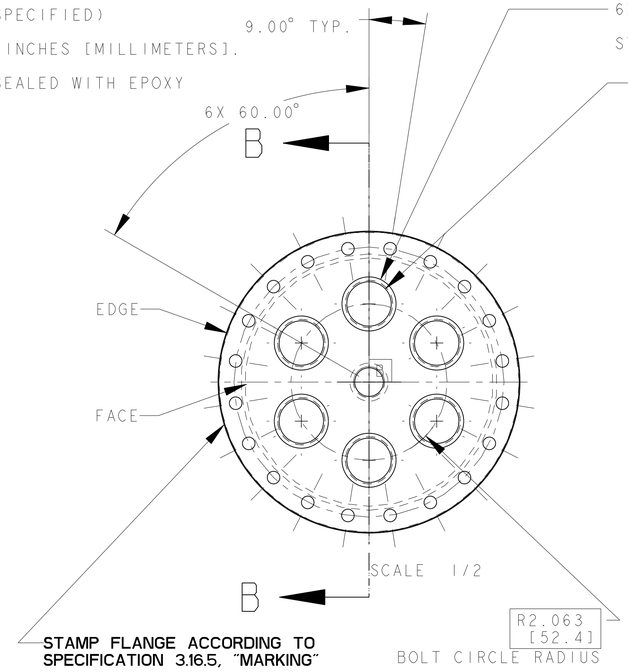

DETAIL, ITEM 8, STANDARD 8" CONFLAT FLANGE

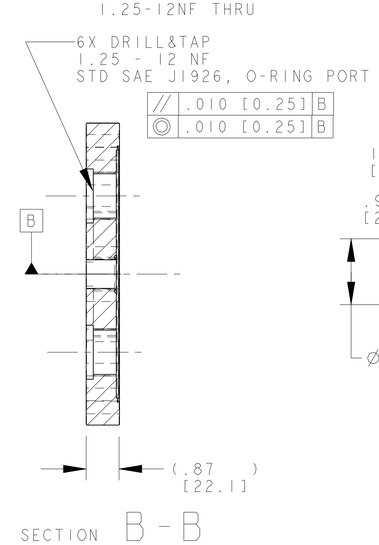

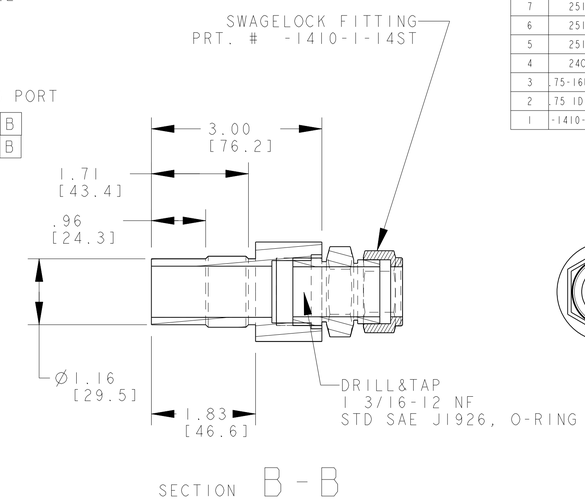

ITEM 7, LARGE INSULATOR

ITEM	PART NO	REQD	DESCRIPTION	MATERIAL
11	25M808	1	Wire Tray, 600 Amp (SEE SHEET 3)	-
10	251472	1	BAFFLE SPACER	-
9	251471	2	BAFFLE 600 AMP VC LEAD ASSY	-
8	251470	1	STANDARD 8" CONFLAT FLANGE, VAPOR COOLED LEAD CLUSTER	-
7	251469	6	LARGE INSULATOR, 600 AMP	Nema G10
6	251468	6	600 AMP LEAD (SEE SHEET 2)	-
5	251466	1	INSTRUMENTATION FEED THROUGH	-
4	24C325	1	STABILIZER DISC	NEMA G10
3	.75-16UNF NUT	3	HEX NUT, .75-16 UNF	
2	.75 ID WASHER	3	FLAT WASHER, .75 ID	CRES
1	-1410-1-14ST	6	SWAGELOK SAE MALE CONNECTOR (7/8"-TUBE)	-

BOM FOR SHEET 1 ONLY

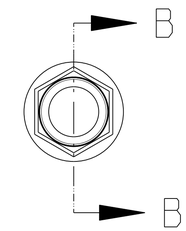

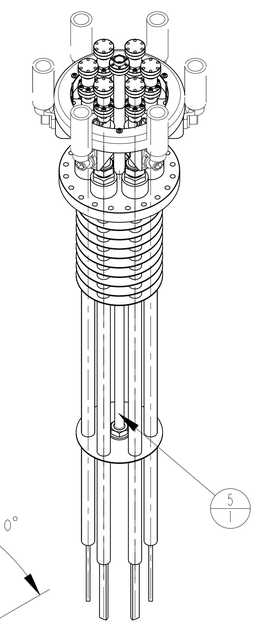

SCALE 1/5

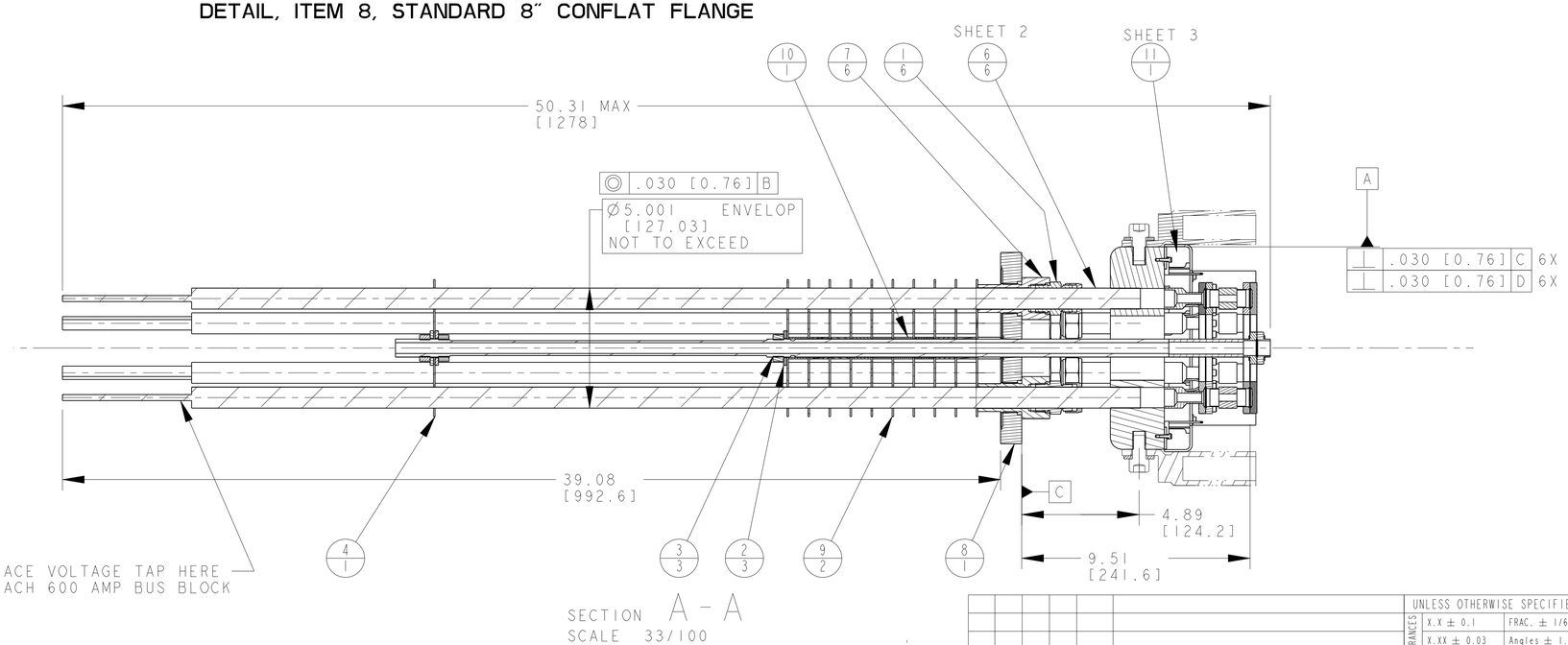

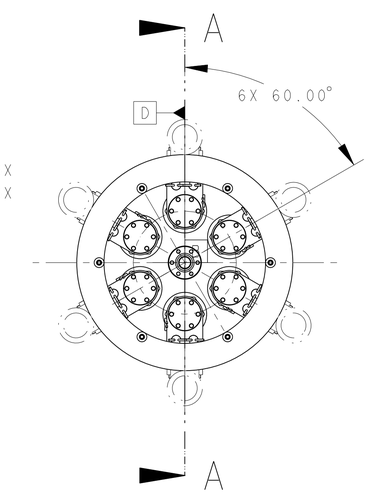

SPEC CONTROL DRAWING
8/20/02

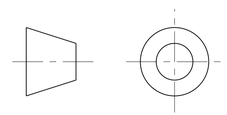

THIRD ANGLE PROJECTION

REV	DWG	CHK	ZONE	DATE	CHANGES
A	SB	JER		10/03/02	INITAL RELEASE

UNLESS OTHERWISE SPECIFIED

TOLERANCES		
	X.X ± 0.1	FRAC. ± 1/64
	X.XX ± 0.03	Angles ± 1.00°
	X.XXX ± 0.010	FINISH 125 √ (Ra)

DO NOT SCALE PRINT

THREADS ARE CLASS 2
CHAMFER ENDS OF ALL SCREW TREADS 30°
CUT ROUND, 1.5 THREAD RELIEF ON MACHINED THREADS
BREAK EDGES .016 MAX. ON MACHINED WORK
REMOVE BURRS, WELD SPLATTER & LOOSE SCALE
IN ACCORDANCE WITH ASME Y14.5M & B46.1

SHOP ORDERS

ACCT NO.	NO. REQD	SER NO.	-
DEL TO		DATE ISSD	-
SURFACE TREATMT	-	DATE REQD	-
IDENT METHOD	TAG		
PROJECT NUMBER	N/A		
PROJECT NAME	N/A		
DWG BY	KNOLLS	DATE	02-Oct-02
CHK BY	Jon Zbasnik	DATE	04-APR-02
APR BY	Jon Zbasnik	DATE	04-APR-02

ERNEST ORLANDO LAWRENCE BERKELEY NATIONAL LABORATORY
UNIVERSITY OF CALIFORNIA - BERKELEY

LHC IR FEEDBOX
MAJOR ASSEMBLY
600 AMP, 6 LEAD VAPOR COOLED ASSY

MICROFILMED:	DWG. TYPE	SHOWN ON	SCALE: 1/100	DO NOT SCALE PRINTS
	ASSEM		SHEET 1 OF 3	
PATENT CLEAR:	DESIGN ACCT. NO.	CATEGORY CODE	DWG. NO.	SIZE / REV.
	Z5LCE2	LH2001	24C3534	A

Dwg. File: 24C3534.Wheel File: 24C3534.

DWG. NO.	SIZE	REV.	SH.
24C3534	A	2	

NOTES FOR SHEET 2 ONLY:

1. ITEM 4 INSULATED TO PROVIDE 2 KV DC CAPABILITY WHEN ASSEMBLED AS SHOWN ON 24C353

ITEM	PART NO	REQD	DESCRIPTION	MATERIAL
11	S100722	1	MINCO THERMAL SENSOR, PT 100	-
M4 x 0.7 x 12.7mm ISO		1	SHCS, M4 x 0.7 x 12.7mm ISO	
9	G2A153DP24	2	WATLOW FIREROD HEATER (.375OD)	
8	4511-01-CF	1	CERAMA SEAL INSULATOR	-
7	-	1	MSCS 1308	
6	-	1	MPW1301	
5	-	1	MINI CONFLAT BLANK	304 SS
4	-	1	7/8" DIAMETER CURRENT LEAD ELEMENT	
3	-	1	1-1/3 MINI CONFLAT (METRIC)	304 SS
2		1	LUG ASSEMBLY	-
1		1	REDUCER	A/R

BOM FOR SHEET 2 ONLY

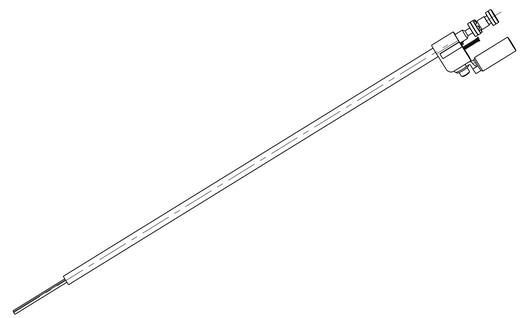

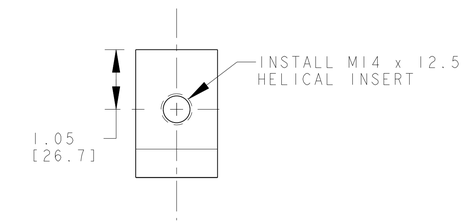

ITEM 2, LUG ASSEMBLY

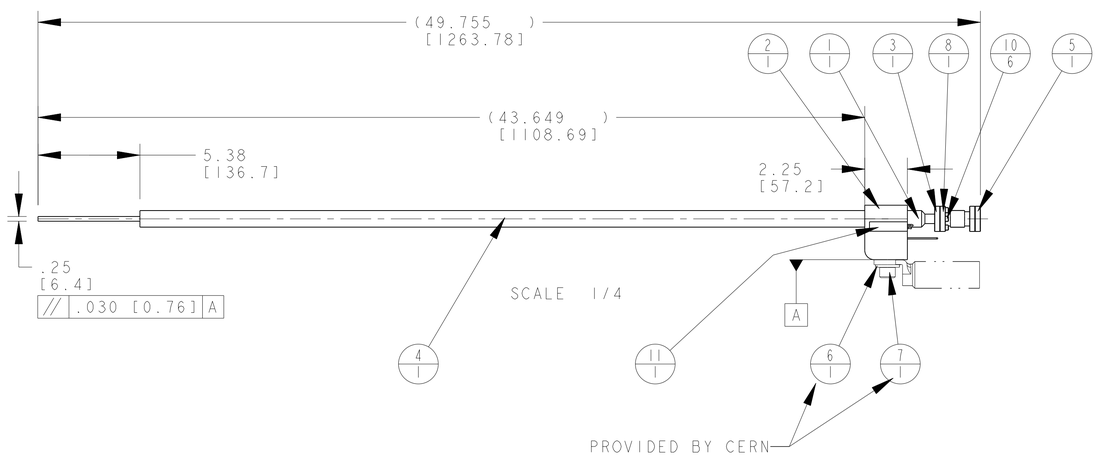

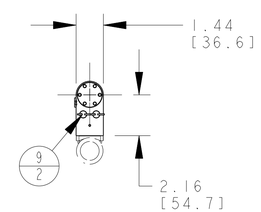

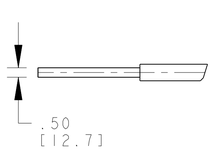

SPEC CONTROL DRAWING
8/20/02

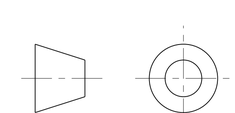

THIRD ANGLE PROJECTION

ERNEST ORLANDO LAWRENCE
BERKELEY NATIONAL LABORATORY
UNIVERSITY OF CALIFORNIA - BERKELEY

LHC IR FEEDBOX
MAJOR ASSEMBLY
600 AMP,6 LEAD VAPOR COOLED ASSY

MICROFILMED:	DWG. TYPE: ASSEM	SHOWN ON	SCALE: 11/100	DO NOT SCALE PRINTS
			SHEET 2 OF 3	
PATENT CLEAR:	DESIGN ACCT. NO.: Z5LCE2	CATEGORY CODE: LH2001	DWG. NO.: 24C3534	SIZE: A / REV.

DWG. NO.	SIZE	REV.	SH.
24C3534	A	3	

ITEM	PART NO	REQD	DESCRIPTION	MATERIAL
5	M3 WASHER	6	FLAT WASHER, M3	CRES
4	M3 SHCS	12	M3X0.5 x 10.0 SOCKET HD CAP SCREW	
3	251467	1	COVER, WIRE TRAY	UHMW-PE
2	251465	6	KEEPER, LEAD HEATER	6061-T6 ALUM
1	251464	1	WIRE TRAY, 600AMP LEAD	UHMW-PE

BOM FOR SHEET 3 ONLY

WIRE TRAY, 600 AMP

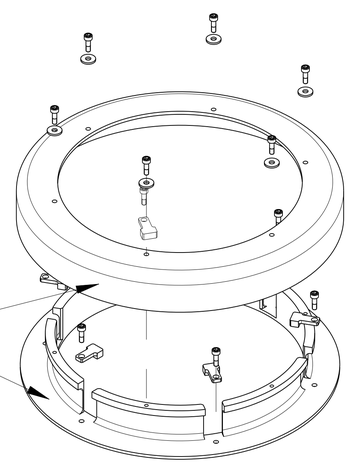

SCALE 1/2

WIRE OUTLET HOLES TO BE DETERMINED AT FINAL ASSEMBLY

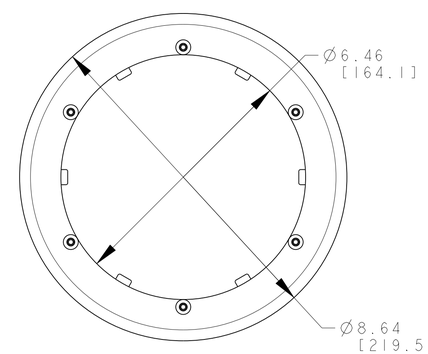

SCALE 1/2

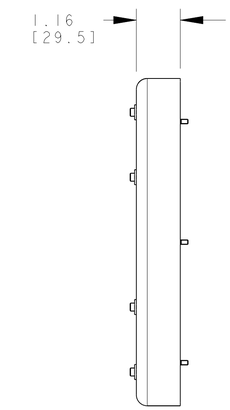

SPEC CONTROL DRAWING
8/20/02

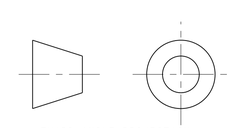

THIRD ANGLE PROJECTION

ERNEST ORLANDO LAWRENCE
BERKELEY NATIONAL LABORATORY
UNIVERSITY OF CALIFORNIA - BERKELEY

LHC IR FEEDBOX
MAJOR ASSEMBLY
600 AMP,6 LEAD VAPOR COOLED ASSY

MICROFILMED:	DWG. TYPE	SHOWN ON	SCALE: 11/100	DO NOT SCALE PRINTS
	ASSEM		SHEET 3 OF 3	
PATENT CLEAR:	DESIGN ACCT. NO.	CATEGORY CODE	DWG. NO.	SIZE / REV.
	Z5LCE2	LH2001	24C3534	A