NOTE:
1. DERIVED FROM SPECIFICATION LHC-DFBX-ES-100
2. DERIVED FROM SPECIFICATION LHC-DFBX-ES-200
3. DERIVED FROM SPECIFICATION LHC-DFBX-ES-210
4. DERIVED FROM SPECIFICATION LHC-DFBX-ES-240
5. DERIVED FROM SPECIFICATION LHC-DFBX-ES-260
6. DERIVED FROM SPECIFICATION LHC-DFBX-ES-250
7. DERIVED FROM SPECIFICATION LHC-DFBX-ES-230
8. FILL MOUNTING HOLES WITH EPOXY
9. HTS CURRENT LEAD IN SPECIFICATION M923B
10. PLATE FLATNESS TOLERANCE IS BASED ON FOLLOWING CONSTRAINTS
    40 MM FLUID LEVEL RANGE ON THE HTS LEADAT 10 ° OR 39.3 MM
    - 20 MM FLUID LEVEL CONTROL RANGE
    - 15 MM VARIATION IN HTS POSITION DUE TO FLOOR GRADE
    - 0.8 MM VARIATION IN HTS SEAT POSITION
    - 0.2 MM VARIATION IN SEAL TOLERANCE
    - 0.2 VARIATION IN SEAL SURFACE POSITION
    LEAVES 0.125" [3.1 MM] IN PLATE VARIATION

PRELIMINARY

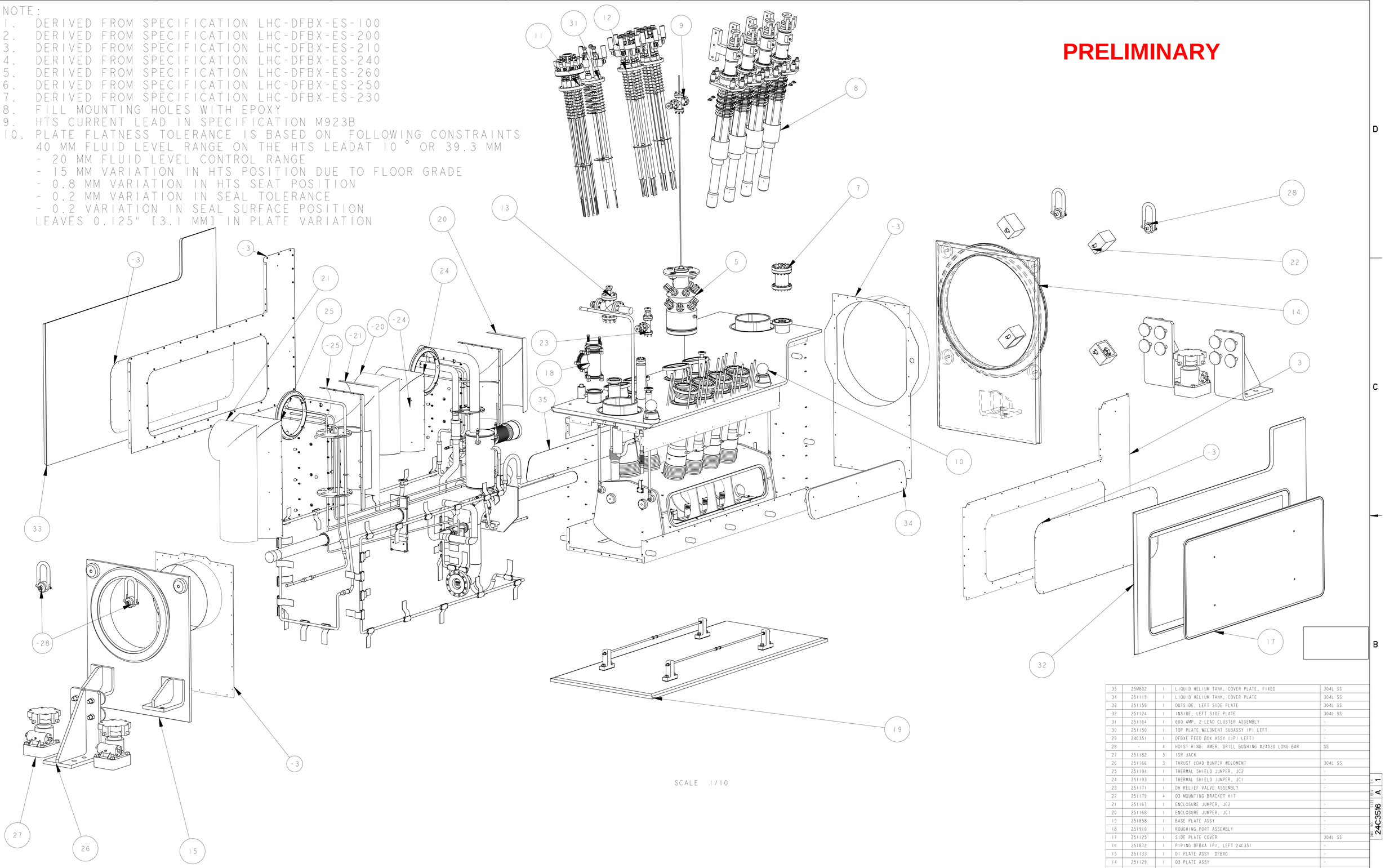

SCALE 1/10

ITEM	PART NO	REQD	DESCRIPTION	MATERIAL
35	25M802	1	LIQUID HELIUM TANK, COVER PLATE, FIXED	304L SS
34	251119	1	LIQUID HELIUM TANK, COVER PLATE	304L SS
33	251159	1	OUTSIDE, LEFT SIDE PLATE	304L SS
32	251124	1	INSIDE, LEFT SIDE PLATE	304L SS
31	251164	1	600 AMP, 2-LEAD CLUSTER ASSEMBLY	-
30	251150	1	TOP PLATE WELDMENT SUBASSY (P1 LEFT	-
29	24C351	1	DFBXE FEED BOX ASSY (1P1 LEFT)	-
28	-	4	HOIST RING: AMER. DRILL BUSHING #24020 LONG BAR	SS
27	251182	3	ISR JACK	
26	251166	3	THRUST LOAD BUMPER WELDMENT	304L SS
25	251194	1	THERMAL SHIELD JUMPER, JC2	-
24	251193	1	THERMAL SHIELD JUMPER, JC1	-
23	251171	1	DH RELIEF VALVE ASSEMBLY	-
22	251179	4	Q3 MOUNTING BRACKET KIT	
21	251167	1	ENCLOSURE JUMPER, JC2	-
20	251168	1	ENCLOSURE JUMPER, JC1	-
19	251858	1	BASE PLATE ASSY	-
18	251910	1	ROUGHING PORT ASSEMBLY	-
17	251125	1	SIDE PLATE COVER	304L SS
16	251872	1	PIPING DFBXA (P1, LEFT 24C351	-
15	251133	1	DI PLATE ASSY DFBXG	-
14	251129	1	Q3 PLATE ASSY	-
13	251339	1	HELIUM PORT RELIEF VALVE ASSEMBLY	-
12	24C353	2	600 AMP,6 LEAD VAPOR COOLED ASSY	-
11	24C322	1	120 AMP VC LEAD MOUNTING ASSY	-
10	251868	2	TOOLING BALL, LHCG1MSA00092	-
9	251162	1	LHE DIAGNOSTIC ASSY	-
8	251156	6	PIRELLI HTS LEAD KIT	-
7	251851	1	HELIUM GUARD ASSEMBLY	-
5	251831	1	LQX DIAGONSTIC ASSEMBLY	-
3	251079	1	THERMAL SHIELD ASSY, DFBXG	-

11. SOLDER JOINT USING SN60PB40 SOLDER; ROSIN FLUX, USE SPLICE PLATE IF REQUIRED
12. CLOSEOUT WELD PROCEDURE TO BE APPROVED BY LBNL
    DISTORTION CONTROL IS ESSENTIAL, ROOT PASS GTAW, COVER PASSES GMAW, SMAW, FCMAW.
13. WELD PROCEDURE TO BE APPROVED BY LBNL, USE GTAW PROCESS
14. BELLOWS TO BE WITHIN 0.03" OF FREE CONFIGURATION AFTER CLOSEOUT WELDING
15. DIMENSIONS FROM DFBX FLANGE FACE ON DI SIDE, ADD -2367.2 MM TO OBTAIN POSITION RELEATIVE TO DFBX COORDINATE SYSTEM
16. SHIM TANK SUPPORTS TO LIMIT STATIC DEFLECTION OF THE LOWER TANK SUPPORT RODS TO LESS THAN 0.25"
17. DIMENSIONS SHOW IN INSPECTION OVAL ARE REFERENCED IN THE FABRICATION TRAVELER
18. COPPER STRAP ATTACHED TO THE THERMAL ANCHORS DO NOT HAVE TO BE EVENLY SPACED.
19. ALL DIMENSIONS GIVEN AT ROOM TEMPERATURE

THIRD ANGLE PROJECTION

REV	DWG	CHK	ZONE	DATE	CHANGES
A	JDR	DPO		10/03/02	INITIAL RELEASE

UNLESS OTHERWISE SPECIFIED
TOLERANCES
X.X ± 0.1 FRAC. ± 1/64
X.XX ± 0.03 Angles ± 1.00°
X.XXX ± 0.010 FINISH 125 √
DO NOT SCALE PRINT
THREADS ARE CLASS 2
CHAMFER ENDS OF ALL SCREW THEADS 30°
CUT ROUND, 1.5 THREAD RELIEF ON MACHINED THREADS
BREAK EDGES .015 MAX. ON MACHINED WORK
REMOVE BURRS, WELD SPLATTER & LOOSE SCALE
IN ACCORDANCE WITH ASME Y14.5M & B46.1

SHOP ORDERS
ACCT NO. / NO. REQD / SER NO. / DATE / ISSD / DATE / REQD / DATE
SURFACE TREATMENT / IDENT TAG / METHOD / PROJECT NUMBER / PROJECT NAME N/A
DWN BY M J KNOLLS DATE 02-Nov-01
CHK BY Jon Zbasnik DATE 03-OCT-02
APP BY Jon Zbasnik DATE 03-OCT-02

ERNEST ORLANDO LAWRENCE BERKELEY NATIONAL LABORATORY
UNIVERSITY OF CALIFORNIA . BERKELEY

LHC IR FEEDBOX
MAJOR ASSEMBLY
DFBXA (1P1, LEFT) FEED BOX ASSY

MICROFILMED: | DWG. TYPE: ASSEM | SHOWN ON: - | SCALE: 1:3/100 | DO NOT SCALE PRINTS
PATENT CLEAR: | DESIGN ACCT. NO.: Z5LCE2 | CATEGORY CODE: LH2001 | DWG. NO.: 24C3516 | SIZE: A | REV.: A
SHEET 1 OF 3

DWG. NO. 24C3516 SHEET NO. 1 REV. A

PRELIMINARY

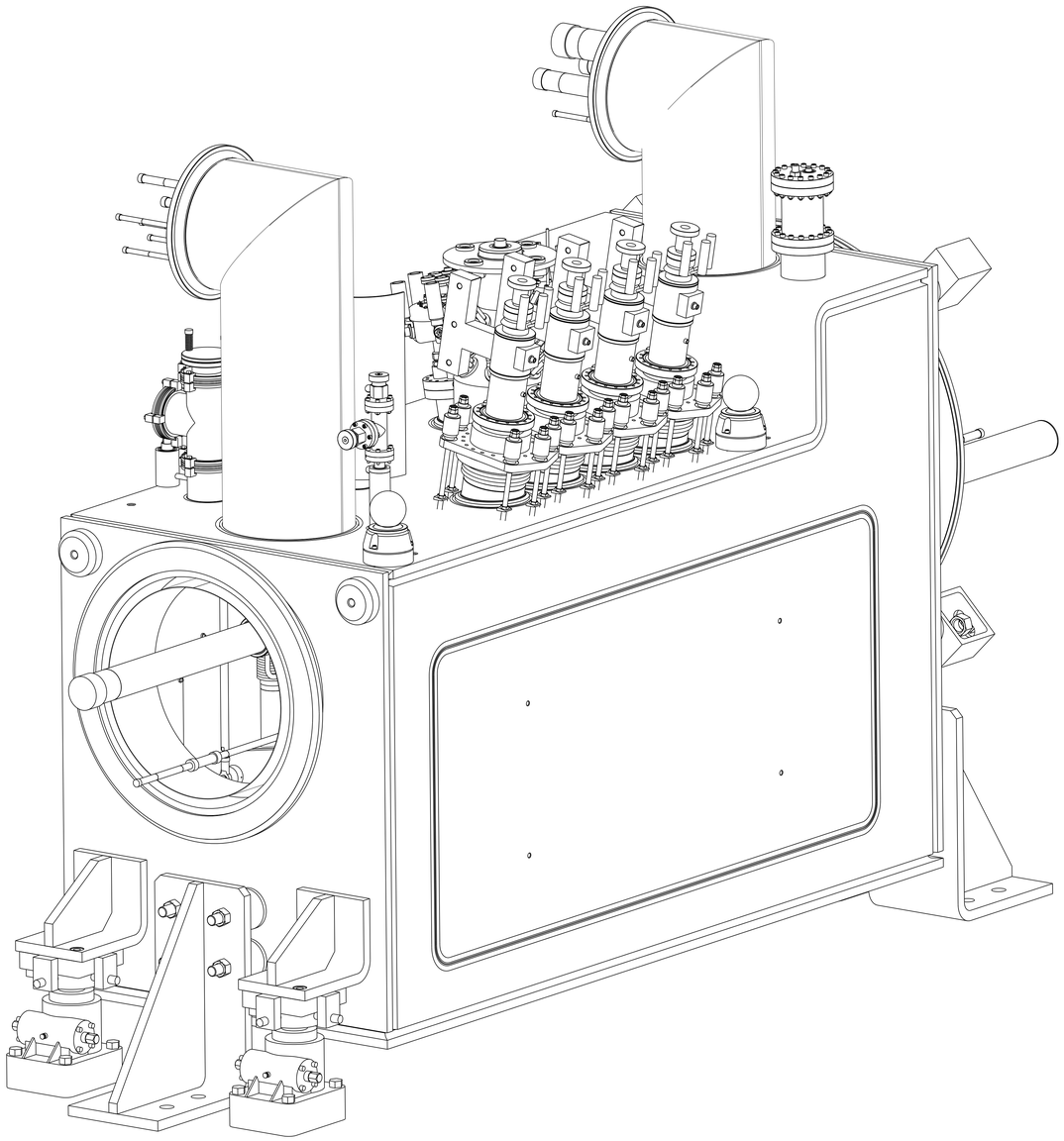

D1 END

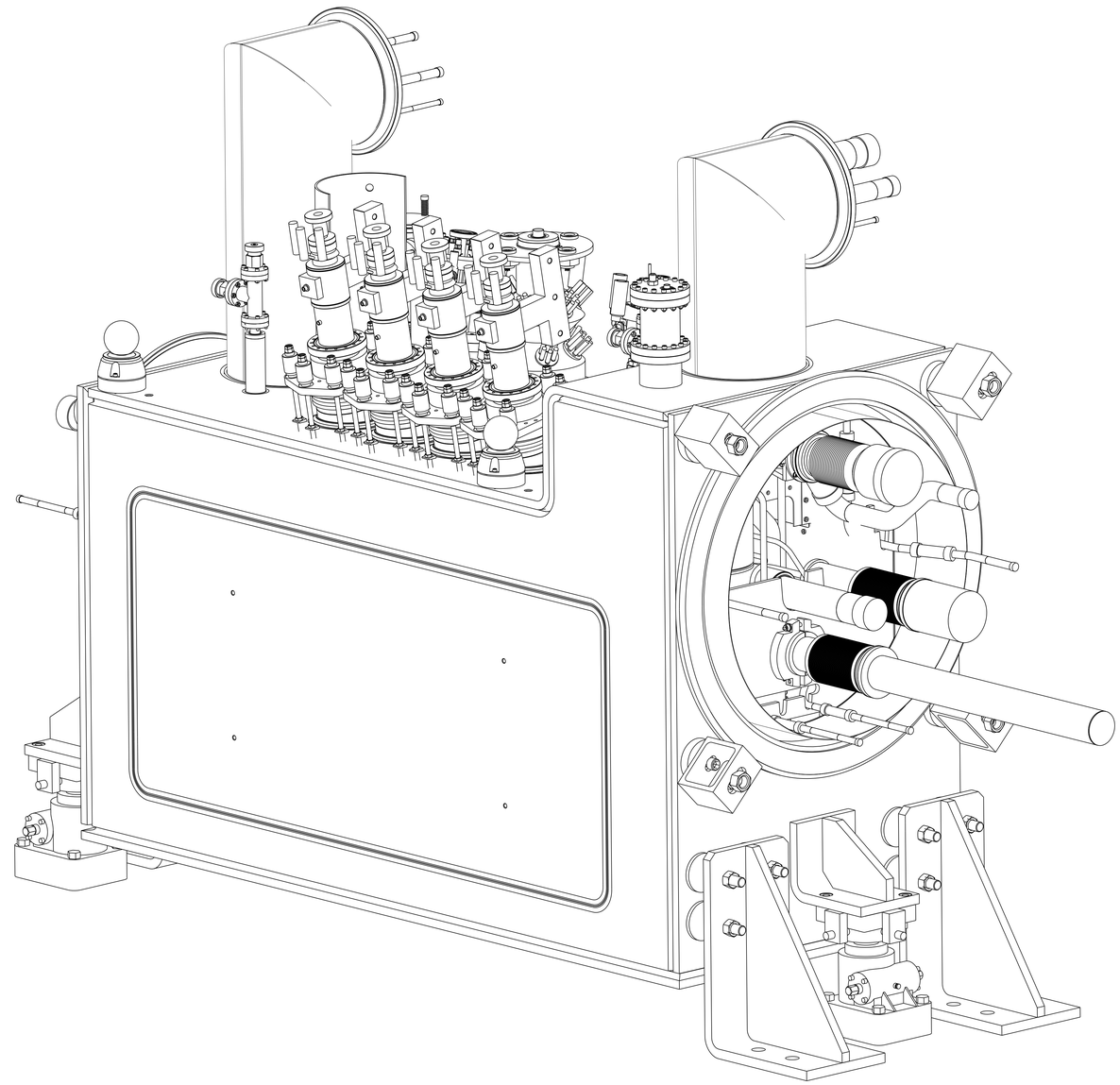

Q3 END

DFBXG, IP8 (LEFT)

THIRD ANGLE PROJECTION

ERNEST ORLANDO LAWRENCE
BERKELEY NATIONAL LABORATORY
UNIVERSITY OF CALIFORNIA - BERKELEY

LHC IR FEEDBOX
MAJOR ASSEMBLY
DFBXA (IP1, LEFT) FEED BOX ASSY

MICROFILMED:	DWG. TYPE	SHOWN ON	SCALE: 9/50	DO NOT SCALE PRINTS
	ASSEM	-	SHEET 2 OF 3	
PATENT CLEAR:	DESIGN ACCT. NO.	CATEGORY CODE	DWG. NO.	SIZE / REV.
	Z5LCE2	LH2001	24C3516	A

DWG. NO. 24C3516 SIZE A REV 2

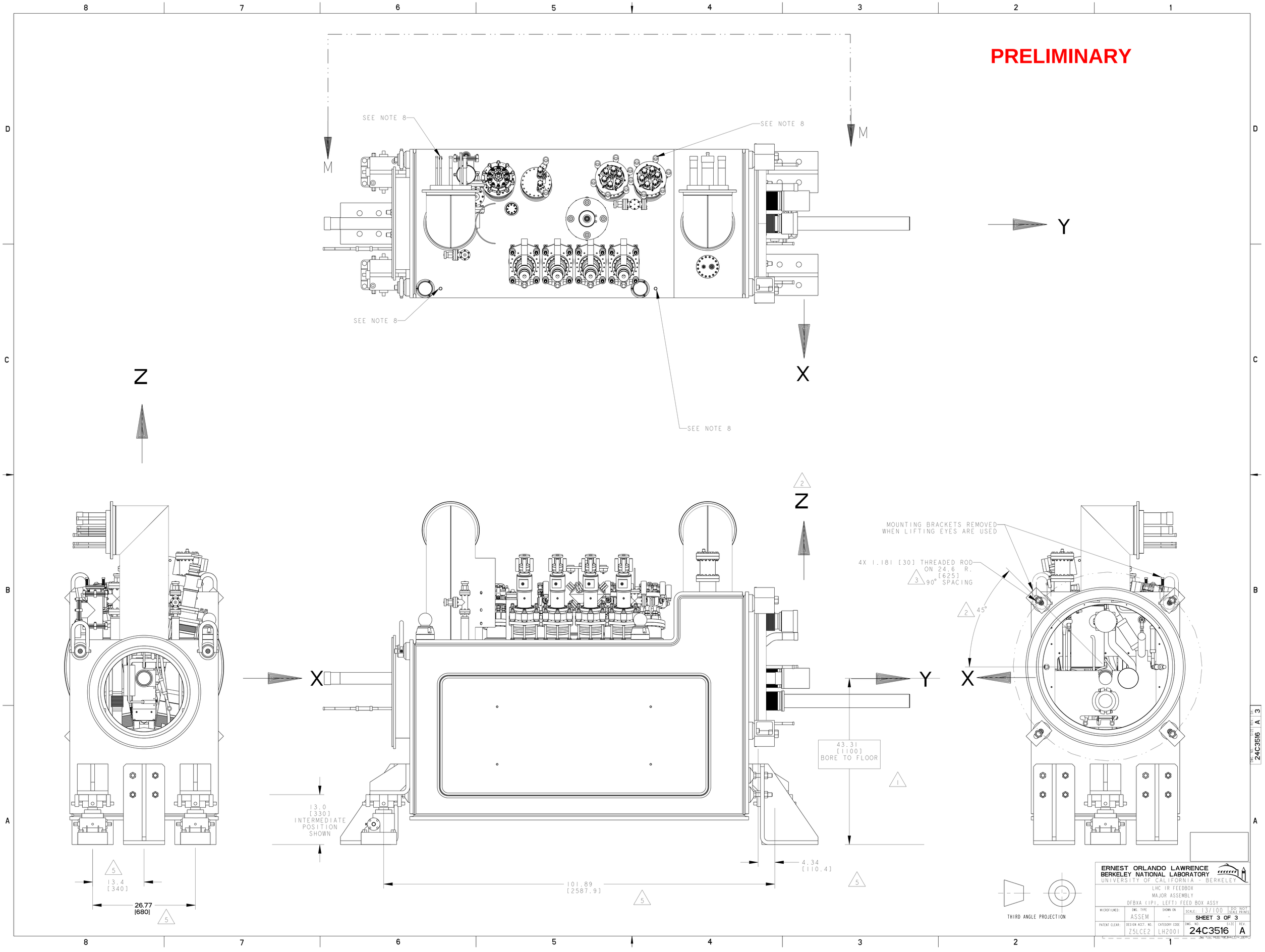
PRELIMINARY
SEE NOTE 8
SEE NOTE 8
SEE NOTE 8
SEE NOTE 8
M
M
Y
X
Z
Z
X
Y
X
MOUNTING BRACKETS REMOVED
WHEN LIFTING EYES ARE USED
4X 1.181 [30] THREADED ROD
ON 24.6 R.
[625]
90° SPACING
45°
43.31
[1100]
BORE TO FLOOR
13.0
[330]
INTERMEDIATE
POSITION
SHOWN
13.4
[340]
26.77
[680]
101.89
[2587.9]
4.34
[110.4]
THIRD ANGLE PROJECTION
ERNEST ORLANDO LAWRENCE
BERKELEY NATIONAL LABORATORY
UNIVERSITY OF CALIFORNIA - BERKELEY
LHC IR FEEDBOX
MAJOR ASSEMBLY
DFBXA (IP1, LEFT) FEED BOX ASSY
MICROFILMED:
DWG. TYPE
ASSEM
SHOWN ON
-
SCALE: 13/100
DO NOT SCALE PRINTS
SHEET 3 OF 3
PATENT CLEAR:
DESIGN ACCT. NO.
Z5LCE2
CATEGORY CODE
LH2001
DWG. NO.
24C3516
SIZE
REV.
A
DWG. NO. 24C3516
SIZE A
REV. 3