NOTES (UNLESS OTHERWISE SPECIFIED):

1) DIMENSIONS IN INCHES.

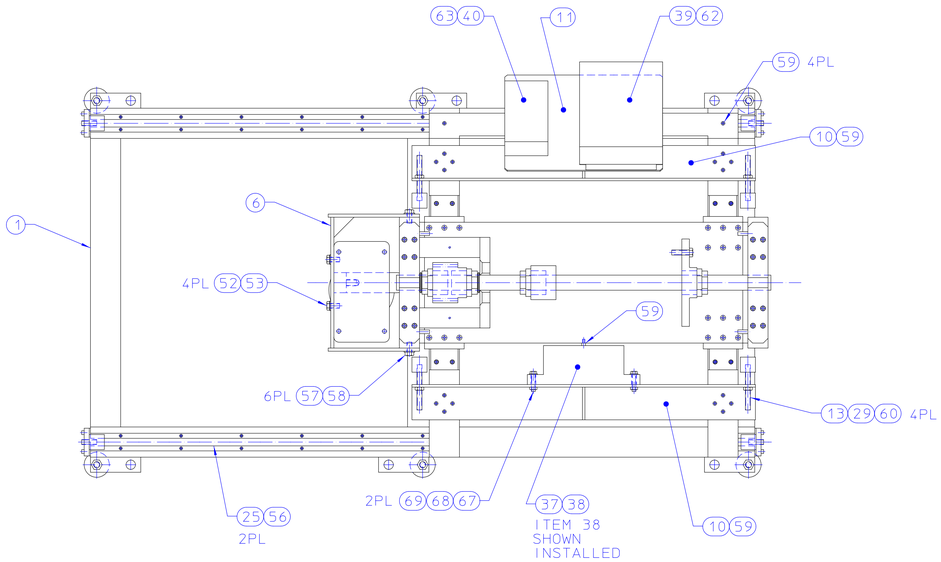

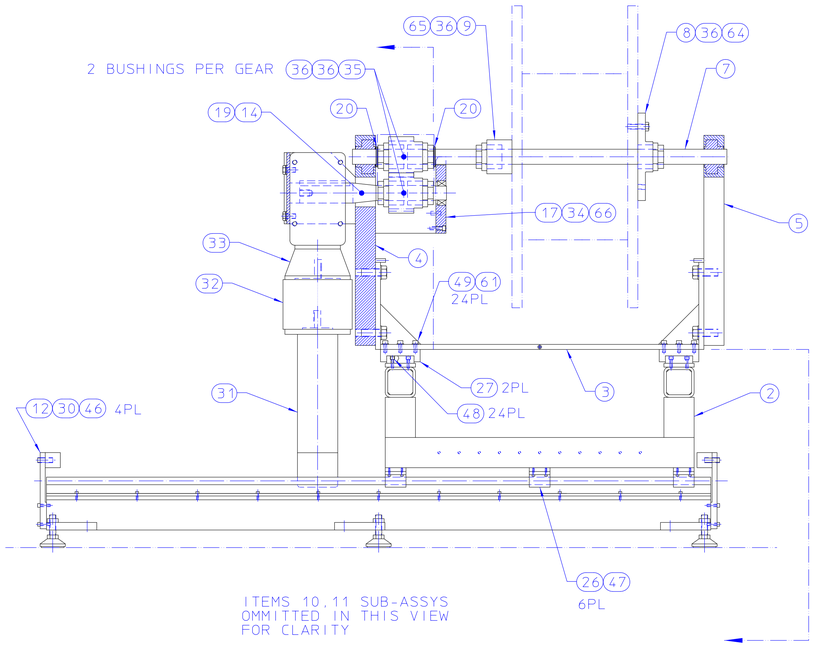

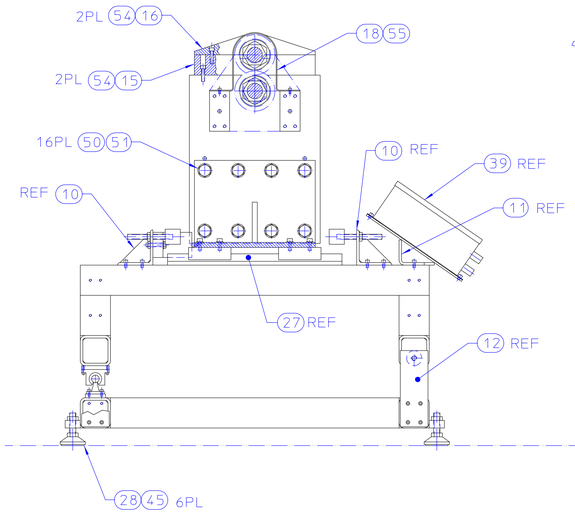

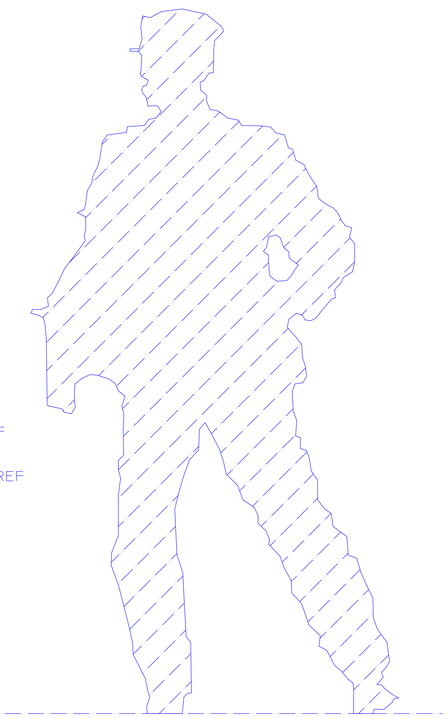

ITEM	REQD	PART NO.	DESCRIPTION
69	2		WSHR, FL, RD, 3/8, SST
68	2		NUT, HEX, 3/8-16 UNC-2B, SST
67	2		BOLT, HEX HD, 3/8-16 UNC-2A X 1-3/4 L, SST
66	8		SCREW, SCH CAP, 5/16-18 UNC-2A X 1-1/4 L, SST
65	1		SCREW, SET, 3/8-16 UNC-2A X 1-1/4 L, SST
64	1		BOLT, HEX HD, 1/2-13 UNC-2A X 1-3/4 L, SST
63	4		SCREW, SCH, CAP, 8-32 UNC-2B X 1/4 L, SST
62	4		SCREW, SCH, CAP, 1/4-20 UNC-2B X 1/4 L, SST
61	24		WASHER, FL, RD, M8, SST
60	4		NUT, HEX, 1/2-13 UNC-2B, SST
59	19		SCREW, SCH, CAP, 1/4-20 UNC-2A X 1/2 L, SST
58	6		WASHER, FL, RD, 1/2, SST
57	6		BOLT, HEX HD, 1/2-13 UNC-2A X 1 L, SST
56	44		SCREW, SCH, CAP, 10-24 UNC-2A X 5/8 L, SST
55	2		SCREW, SCH, CAP, 10-24 UNC-2A X 3/8 L, SST
54	32		SCREW, SCH, CAP, 1/4-20 UNC-2A X 1-1/4 L, SST
53	4		WASHER, FL, RD, M12, SST
52	4		BOLT, HEX HD, M12 X1.75-4g6g X 25mm L, SST
51	16		WASHER, FL, RD, 3/4, SST
50	16		BOLT, HEX HD, 3/4-10 UNC-2A X 2 L, SST
49	24		SCREW, SCH, CAP, M8 X1.25-4g6g X 22mm L, SST
48	24		SCREW, SCH, CAP, 1/4-20 UNC-2A X 7/8 L, SST
47	24		SCREW, SCH, CAP, 8-32 UNC-2B X 5/8 L, SST
46	16		SCREW, SCH, CAP, 1/4-20 UNC-2A X 1 L, SST
45	6		NUT, HEX, 5/8-11 UNC-2B, SST
44			
43			
42			
41			
40	1		AMPLIFIER, 1-AXIS, FOR MOTOR ENCODER (ITEM 31), SERVO DYNAMICS CORP. NO. SDSMSA_1525-17
39	1		CONTROLLER, TENSION, MAGPOWR DIGITRAC 2 MODEL D2E (FOR ITEMS 37, 38)
38	1		LOAD CELL, 550 LB, MAGPOWR NO. GTSB550
37	1		LOAD CELL, 55 LB, MAGPOWR NO. GTSA55
36	6		BUSHING, KEYLESS, 1-1/2 SHAFT, TRANTORQUE NO. 6202400
35	2		GEAR, SPUR, 5 DP, 18 TOOTH, 3.600 PD, 20° PA, MARTIN NO. TS518 X (2-3/8 +.005 -.000) BORE-TO-SIZE ID
34	1		BEARING, ROLLER, SPHERICAL, 35mm BORE X 80mm OD, TORRINGTON NO. 21307-VCSJ OR EQL
33	1		SPEED REDUCER, WORM GEAR, 250/1, NEMA 56C, BROOK-HANSEN NO. SWZH45B250U
32	1		BRAKE, MOTOR, AC, NEMA 56C, SPRING-SET, BOSTON GEAR NO. CMMBA56R-3, ITEM CODE 67545
31	1		SERVO-MOTOR, DC BRUSHED, NEMA 56C, W/ 1000 LINE ENCODER, SERVO DYNAMICS CORP. NO. MTS30U4-42
30	4		BUMPER, 1/2-13 X 3/4" L MALE THD, POLY-URETHANE, MCMASTER-CARR NO. 9546K67 OR EQL
29	4		BUMPER, 1/2-13 FEMALE THD, POLYURETHANE, MCMASTER-CARR NO. 9546K53 OR EQL
28	6		MOUNT, SWIVEL, LEVELING, 5/8-11 THD X 3-1/4 L,MCMASTER-CARR NO. 6111K53 OR EQL
27	2		BEARING, LINEAR, DUAL-BLOCK, THK NO. HRW35-CR-2-SSC1-440L-II OR EQL
26	6		PILLOW BLOCK, OPEN, 3/4 SHAFT, PACIFIC BEARING NO. PN16C OR EQL
25	2		RAIL ASSY, PACIFIC BEARING NO. SRA16-66 OR EQL
24			
23			
22			
21	REF	M7913	CABLE WINDING & TENSIONING SYSTEM DESIGN
20	2	21F9532	BUSHING, THRUST
19	1	21F9522	KEY, SHAFT, YOKE
18	1	21F9503	GUARD, DRIVE, YOKE
17	1	21F9494	SUPPORT, BEARING, DRIVE, YOKE
16	2	21F9474	SUPPORT, UPPER, BEARING, MAIN
15	2	21F9464	SUPPORT, LOWER, BEARING, MAIN
14	1	21F9394	SHAFT, DRIVE, YOKE
13	4	21F9681	STUD, YOKE BUMPER, TENSIONER
12	4	21F9673	STOP, FRAME, TENSIONER
11	1	21F9666	SUPPORT, CONTROLLER, TENSIONER
10	2	21F9654	SUPPORT, SENSOR, TENSIONER
9	1	21F9643	DRIVE-FLANGE, SMALL, TENSIONER
8	1	21F9634	DRIVE-FLANGE, LARGE, TENSIONER
7	1	21F9622	SHAFT, SPOOL, TENSIONER
6	1	21F9616	SUPPORT, GEAR-BOX, TENSIONER
5	1	21F9604	PILLAR, SUPPORT, TENSIONER
4	1	21F9596	PILLAR, DRIVE, TENSIONER
3	1	21F9584	YOKE, TENSIONER
2	1	21F9576	FRAME, TENSIONER
1	1	21F9564	BASE, TENSIONER

REV	DWG	CHK	ZONE	DATE	CHANGES

UNLESS OTHERWISE SPECIFIED
TOLERANCES: .X ± .1 FRAC. ±1/64; .XX ± .01 ANGLES ±0.5°; .XXX ± .005 FINISH 125√
THREADS ARE CLASS 2
CHAMFER ENDS OF ALL SCREW THREADS 30°
CUT 1.5 PITCH THRD RELIEF WITH ROUND NOSE TOOL ON MACHINE CUT THREADS.
BREAK EDGES .016 MAX. ON MACHINED WORK.
REMOVE BURRS WELD SPLATTER & LOOSE SCALE
REF: ASME Y14.5M & ANSI B46.1.

SHOP ORDERS
ACCT NO. | SERIAL NO.
DATE ISSD. | DATE REQD. | NO. REQD.
DELIVER TO:
SURFACE TREATMENT: CLEAN
IDENT. METH.: TAG
DWG BY: PAL DATE: 08-03-00
CHK BY: PAL DATE: 08-03-00

LAWRENCE BERKELEY NATIONAL LABORATORY
UNIVERSITY OF CALIFORNIA-BERKELEY
BUILDING 77A ASSY SHOP
CABLE WINDING & TENSIONING SYSTEM
TENSIONER ASSY

PATENT CLEAR	DWG. TYPE	SHOWN ON	SCALE	DO NOT SCALE PRINTS
	ASSY		1/6	

MICROFILMED	DESIGN ACCT. NO.	CATEGORY CODE	DWG. NO.	SIZE	REV.
	ROPI-02		21F9546		0