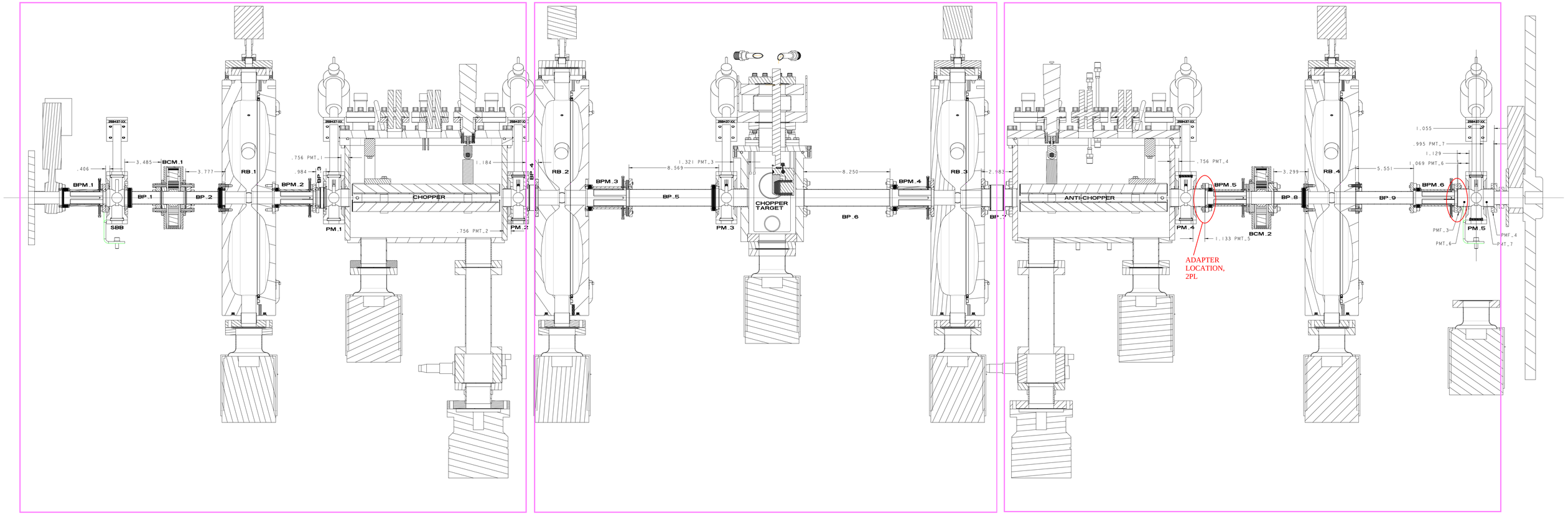

BEAM DIRECTION