NOTES (UNLESS OTHERWISE SPECIFIED):

1) DIMENSIONS IN INCHES.

ITEM	REQD	PART NUMBER	DESCRIPTION
1	1	25B7034	V-BLOCK, PART A
2	1	25B7044	V-BLOCK, PART B
3	1		SCR, SCH, 1/2-13 UNC X 8 L, SS 18-8
4	2		DOWEL PIN, Ø .2500 +.0002 - .0000 X .75 L

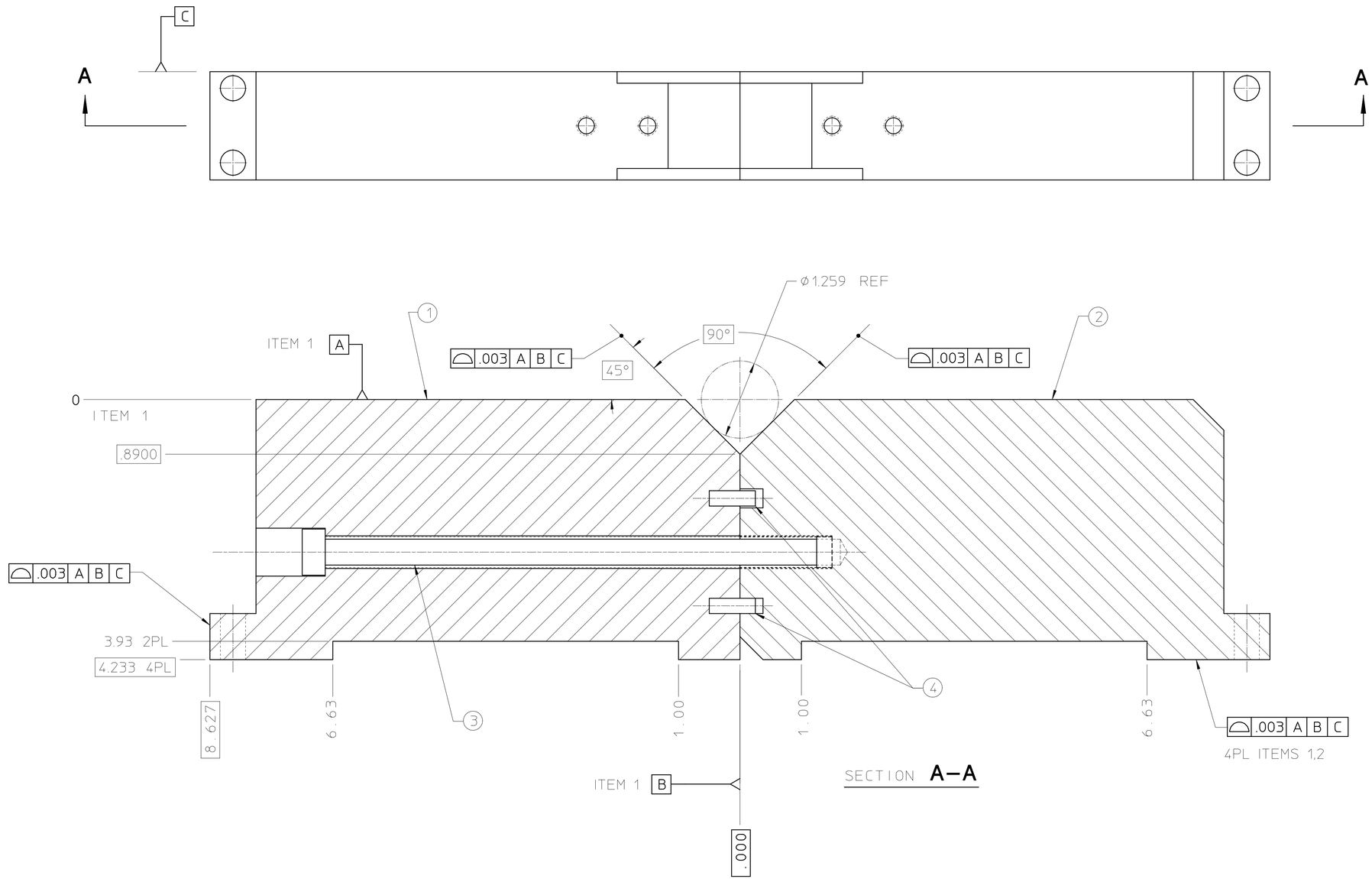

25B7054

REV	DWG	CHK	ZONE	DATE	CHANGES
B	PL	DPO		11-14-01	REDIMENSIONED BASELINE DIMS FOR CLARITY. TOP VIEW UPDATED.
A	PL	DPO		09-10-01	INITIAL RELEASE

UNLESS OTHERWISE SPECIFIED

TOLERANCES: .X ± .1 — FRAC. ± 1/64; .XX ± .01 — ANGLES ± 0.5°; .XXX ± .005 — FINISH 125√

THREADS ARE CLASS 2
CHAMFER ENDS OF ALL SCREW THREADS 30°.
CUT 1.5 PITCH THRD RELIEF WITH ROUND NOSE TOOL ON MACHINE CUT THREADS.
BREAK EDGES .016 MAX. ON MACHINED WORK
REMOVE BURRS WELD SPLATTER & LOOSE SCALE
REF: ASME Y14.5M & ANSI B46.1.

SHOP ORDERS

ACCT. NO. | SERIAL NO.
DATE ISSD. | DATE REQD. | NO. REQD.
DELIVER TO
SURFACE TREATMENT: CLEAN
IDENT. METH.: TAG
DWG. BY: PAL — DATE: 09-10-01
CHK. BY: DPO — DATE: 09-11-09

LAWRENCE BERKELEY NATIONAL LABORATORY
UNIVERSITY OF CALIFORNIA-BERKELEY

SNS - FES MEBT

BEAM PIPES

V-BLOCK ASSY, 30mm

PATENT CLEAR	DWG. TYPE	SHOWN ON	SCALE	DO NOT SCALE PRINTS
	ASSY		FULL	
MICROFILMED	DESIGN ACCT. NO.	CATEGORY CODE	DWG. NO. 25B7054	SIZE / REV. B
	–			

NOTES (UNLESS OTHERWISE SPECIFIED):

1) DIMENSIONS IN INCHES.

ITEM	REQD	PART NUMBER	DESCRIPTION
1	1	25B7034	V-BLOCK, PART A
2	1	25B7044	V-BLOCK, PART B
3	1		SCR, SCH, 1/2-13 UNC X 8 L, SS 18-8
4	2		DOWEL PIN, ø .2500 + .0002 - .0000 X .75 L

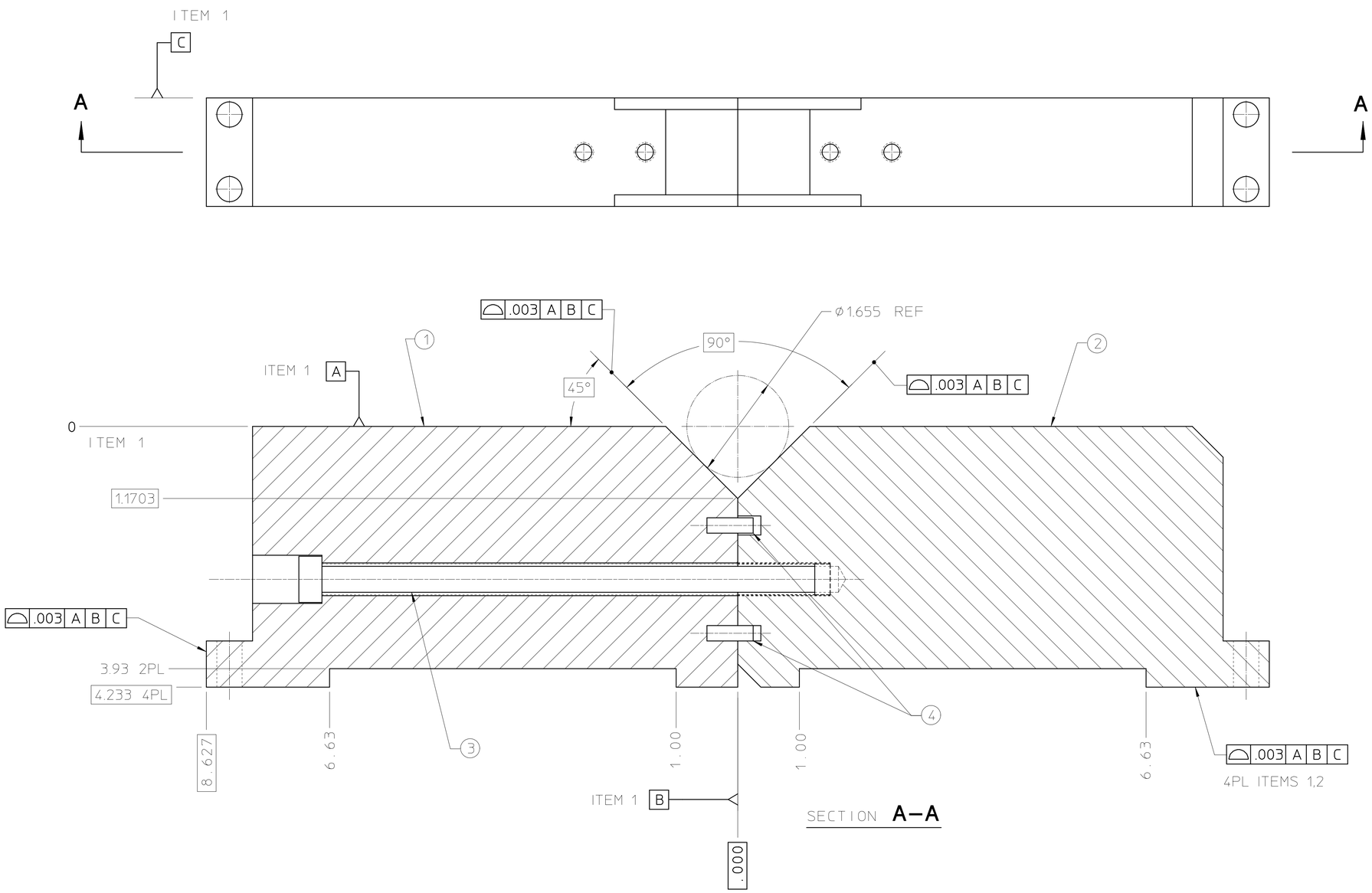

25B7084

REV	DWG	CHK	ZONE	DATE	CHANGES
B	PL	DPO		11-14-01	REDIMENSIONED BASELINE DIMS FOR CLARITY. TOP VIEW UPDATED.
A	PL	DPO		09-10-01	INITIAL RELEASE

UNLESS OTHERWISE SPECIFIED

TOLERANCES: .X ± .1 — FRAC. ± 1/64; .XX ± .01 — ANGLES ± 0.5°; .XXX ± .005 — FINISH 125√

THREADS ARE CLASS 2
CHAMFER ENDS OF ALL SCREW THREADS 30°.
CUT 1.5 PITCH THRD RELIEF WITH ROUND NOSE TOOL ON MACHINE CUT THREADS.
BREAK EDGES .016 MAX. ON MACHINED WORK
REMOVE BURRS WELD SPLATTER & LOOSE SCALE
REF: ASME Y14.5M & ANSI B46.1.

SHOP ORDERS

ACCT. NO. | SERIAL NO.
DATE ISSD. | DATE REQD. | NO. REQD.
DELIVER TO
SURFACE TREATMENT: CLEAN
IDENT. METH.: TAG
DWG. BY: PAL — DATE: 09-10-01
CHK. BY: DPO — DATE: 09-11-09

LAWRENCE BERKELEY NATIONAL LABORATORY
UNIVERSITY OF CALIFORNIA-BERKELEY

SNS - FES MEBT

BEAM PIPES

V-BLOCK ASSY, 40mm

PATENT CLEAR	DWG. TYPE	SHOWN ON	SCALE FULL	DO NOT SCALE PRINTS
MICROFILMED	ASSY		DWG. NO. 25B7084	SIZE / REV. B
	DESIGN ACCT. NO. -	CATEGORY CODE		

NOTES (UNLESS OTHERWISE SPECIFIED):

1) DIMENSIONS IN INCHES.
2) MATL: AL 6061-T6

ITEM	REQD	PART NUMBER	DESCRIPTION

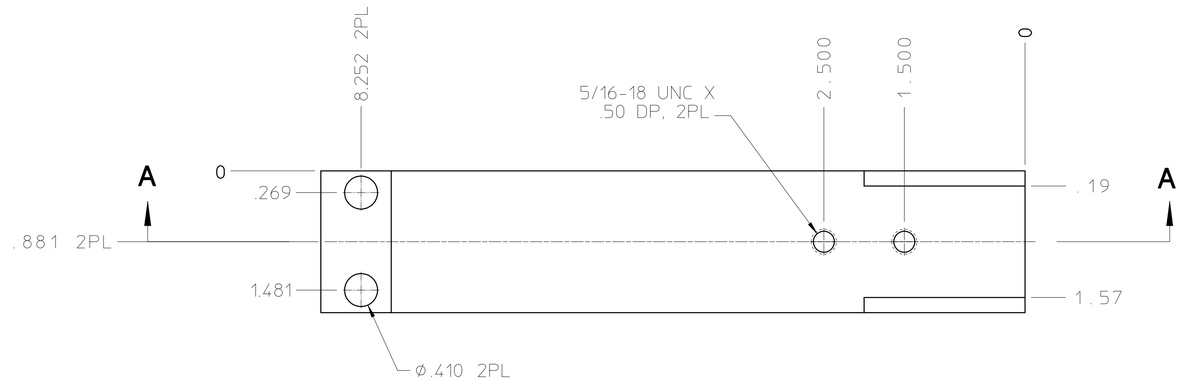

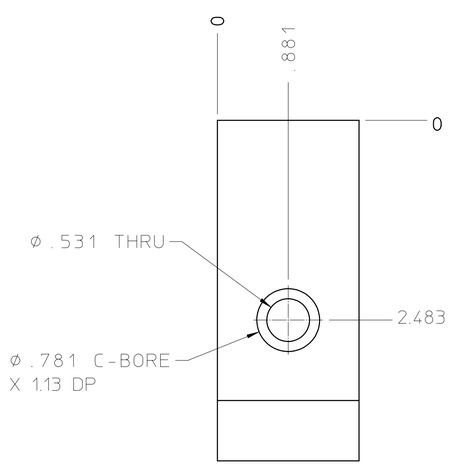

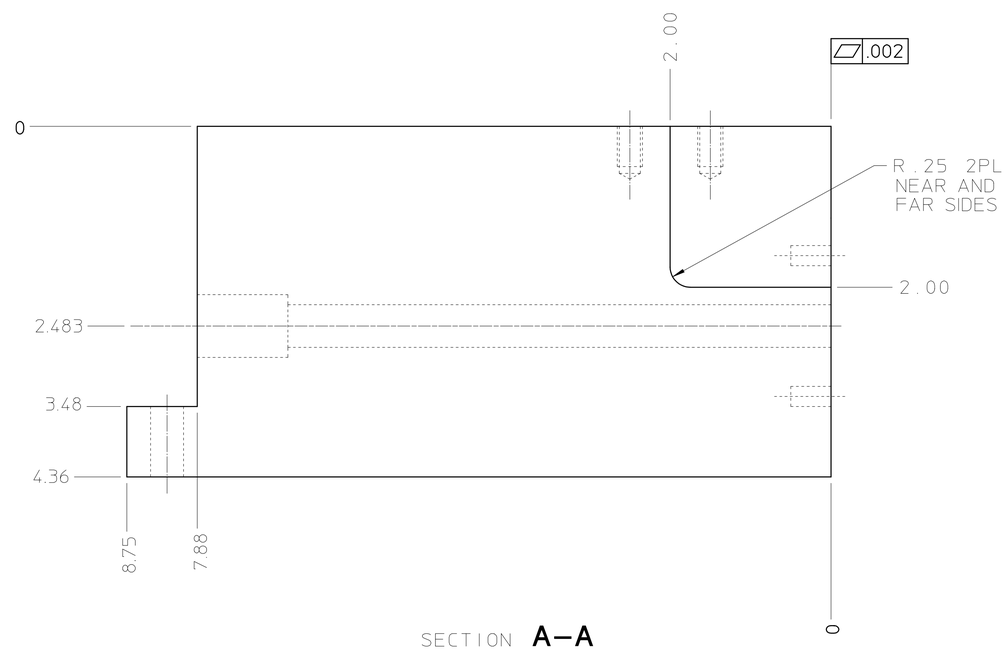

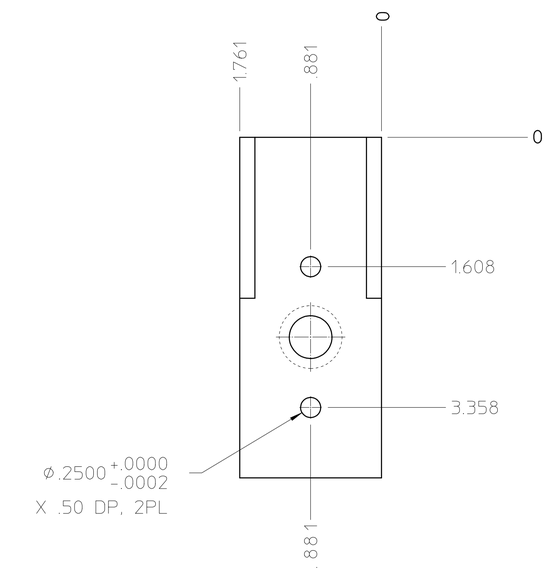

SECTION **A–A**

25B7034

REV	DWG	CHK	ZONE	DATE	CHANGES
B	PL	DPO		11-14-01	ADDED 5/6-18 HOLES AND MILLED POCKETS
A	PL	DPO		09-10-01	INITIAL RELEASE

UNLESS OTHERWISE SPECIFIED

TOLERANCES: .X ± .1 — FRAC. ± 1/64; .XX ± .01 — ANGLES ± 0.5°; .XXX ± .005 — FINISH 125√

THREADS ARE CLASS 2
CHAMFER ENDS OF ALL SCREW THREADS 30°
CUT 1.5 PITCH THRD RELIEF WITH ROUND NOSE TOOL ON MACHINE CUT THREADS.
BREAK EDGES .016 MAX. ON MACHINED WORK
REMOVE BURRS WELD SPLATTER & LOOSE SCALE
REF: ASME Y14.5M & ANSI B46.1.

SHOP ORDERS

ACCT. NO. | SERIAL NO.
DATE ISSD. | DATE REQD. | NO. REQD.
DELIVER TO
SURFACE TREATMENT: CLEAN
IDENT. METH.: TAG
DWG. BY: PAL — DATE: 09-10-01
CHK. BY: DPO — DATE: 09-11-01

LAWRENCE BERKELEY NATIONAL LABORATORY
UNIVERSITY OF CALIFORNIA-BERKELEY

SNS - FES MEBT
BEAM PIPES
V-BLOCK PART "A"

PATENT CLEAR	DWG. TYPE	SHOWN ON	SCALE	DO NOT SCALE PRINTS
	DETAIL		FULL	
MICROFILMED	DESIGN ACCT. NO.	CATEGORY CODE	DWG. NO. 25B7034	SIZE / REV. B

NOTES (UNLESS OTHERWISE SPECIFIED):

1) DIMENSIONS IN INCHES.

ITEM	REQD	PART NUMBER	DESCRIPTION
1	A/R		AL, 6061 T6
2	1		HELICOIL, 1/2-13 UNC X 1.5 L

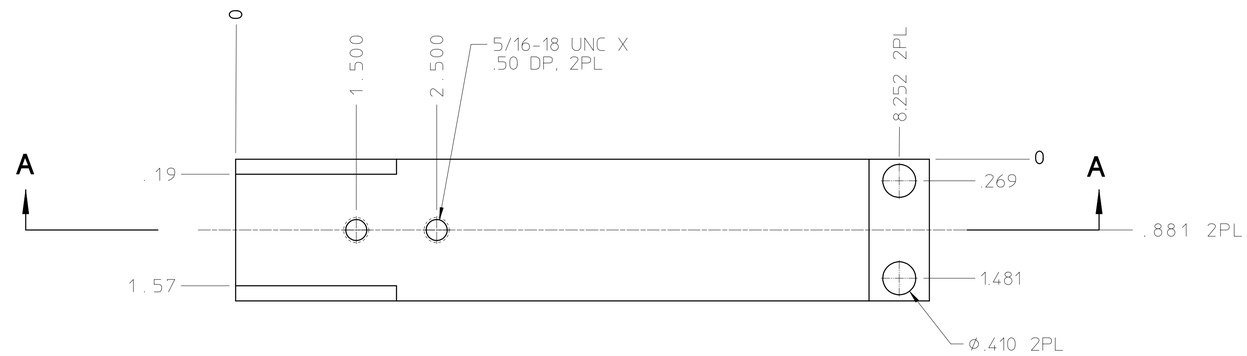

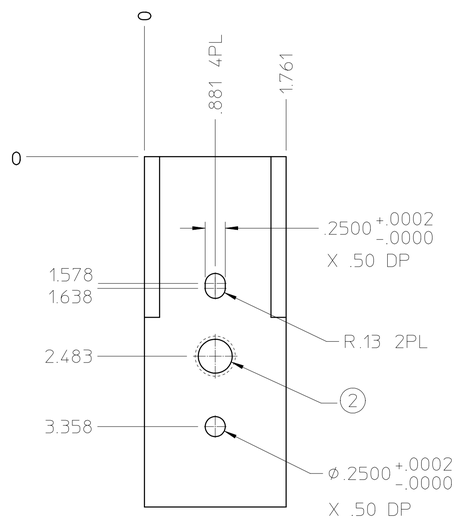

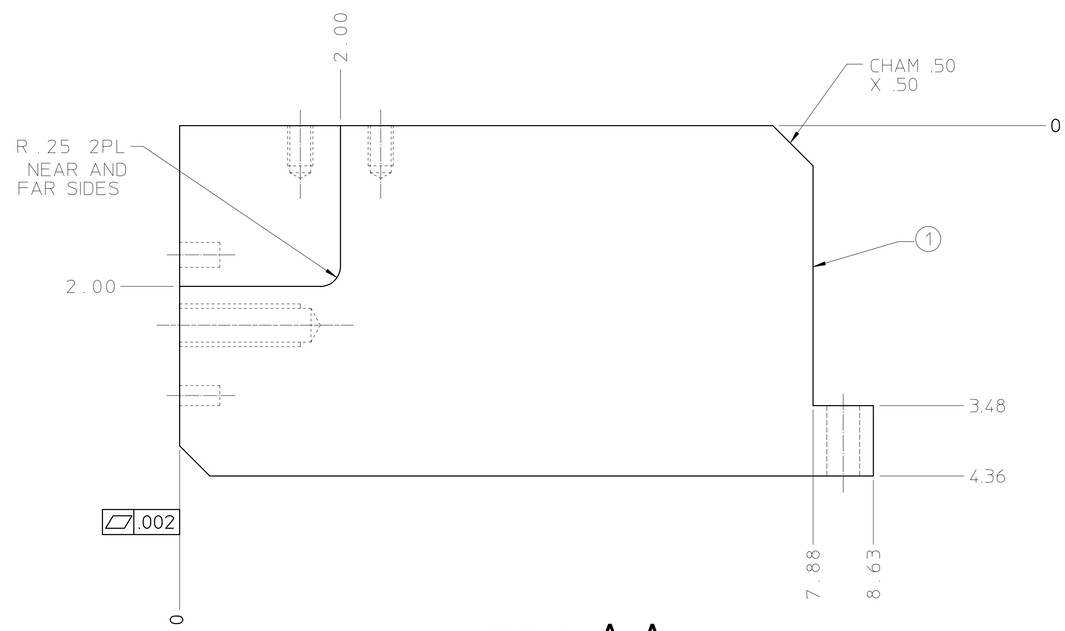

SECTION **A–A**

25B7044

REV	DWG	CHK	ZONE	DATE	CHANGES
B	PL	DPO		11-19-01	ADDED 5/16-18 HOLES AND MILLED POCKETS.
A	PL	DPO		09-10-01	INITIAL RELEASE

UNLESS OTHERWISE SPECIFIED

TOLERANCES: .X ± .1 — FRAC. ± 1/64; .XX ± .01 — ANGLES ± 0.5°; .XXX ± .005 — FINISH 125√

THREADS ARE CLASS 2
CHAMFER ENDS OF ALL SCREW THREADS 30°.
CUT 1.5 PITCH THRD RELIEF WITH ROUND NOSE TOOL ON MACHINE CUT THREADS.
BREAK EDGES .016 MAX. ON MACHINED WORK
REMOVE BURRS WELD SPLATTER & LOOSE SCALE
REF: ASME Y14.5M & ANSI B46.1.

SHOP ORDERS

ACCT. NO. | SERIAL NO.
DATE ISSD. | DATE REQD. | NO. REQD.
DELIVER TO
SURFACE TREATMENT: CLEAN
IDENT. METH.: TAG
DWG. BY: PAL — DATE: 09-10-01
CHK. BY: DPO — DATE: 09-11-01

LAWRENCE BERKELEY NATIONAL LABORATORY
UNIVERSITY OF CALIFORNIA-BERKELEY

SNS - FEX MEBT
BEAM PIPES
V-BLOCK PART 'B'

PATENT CLEAR	DWG. TYPE	SHOWN ON	SCALE	DO NOT SCALE PRINTS
	DETAIL		FULL	
MICROFILMED	DESIGN ACCT. NO.	CATEGORY CODE	DWG. NO. 25B7044	SIZE / REV. B

NOTES (UNLESS OTHERWISE SPECIFIED):

1) DIMENSIONS IN INCHES.
2) MATL: SS 304.

25B7422	ITEM	REQD	PART NUMBER	DESCRIPTION

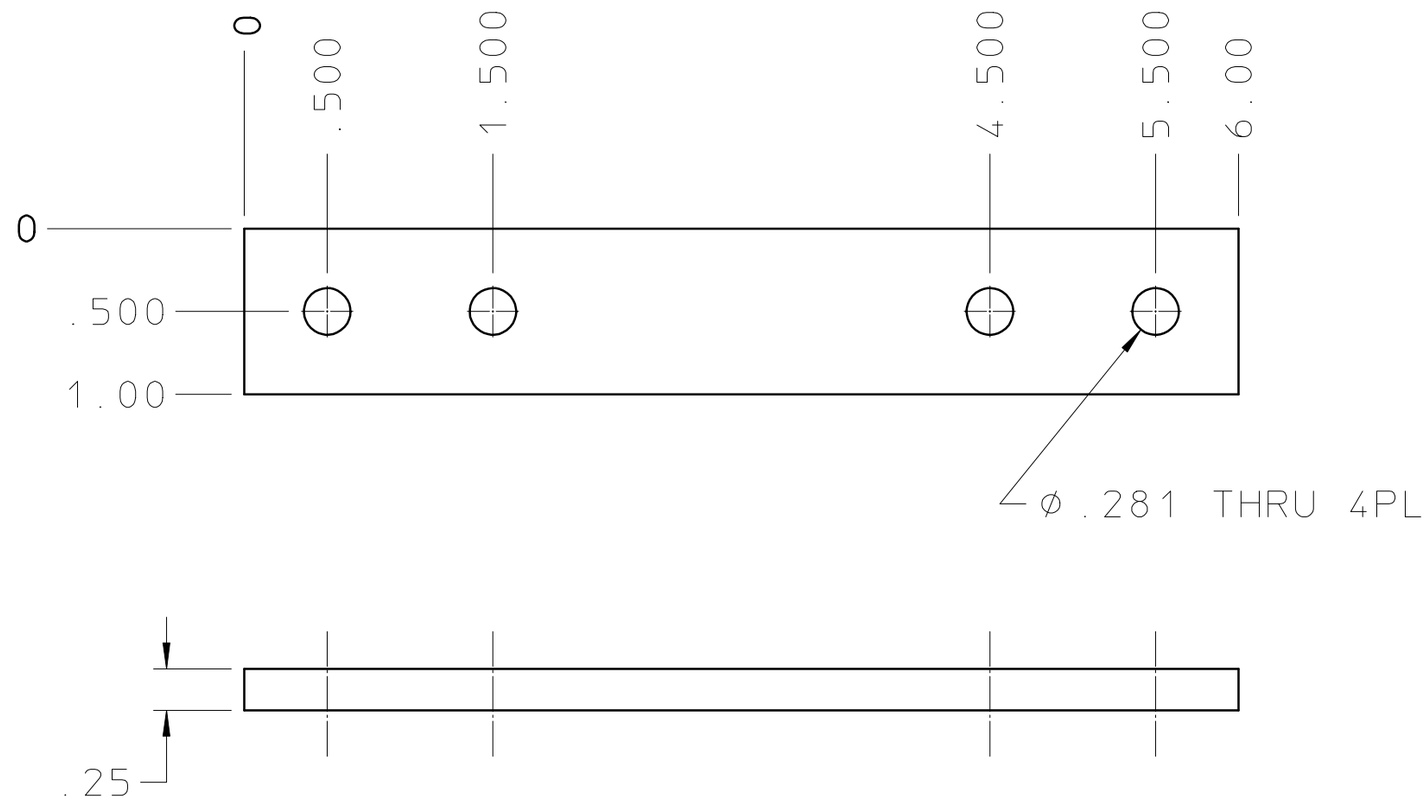

REV	DWN	CHK	DATE	DESCRIPTION

UNLESS OTHERWISE SPECIFIED

TOLERANCE .X ±.1 .XX ± .01 .XXX ±.005

ANGLES: ± 0.5° SURFACE FINISH 125 √

1. SAWED, FLAMECUT, SHEARED OR CUT STOCK FINISH.
2. THREADS CLASS 2.
3. CHAMFER ENDS OF ALL SCREW THRDS 30°.
4. 1 1/2 PITCH RELIEF WITH ROUND NOSE TOOL ON ALL MACHINE CUT THRDS.
5. BREAK EDGES 1/64 MAX. ON MACHINE WORK.
6. REMOVE BURRS, LOOSE SCALE AND WELD SPLATTER.
7. REF: ASME Y14.5M & ANSI B46.1.

SHOP ORDERS

ACCT NO	SER NO	
DATE ISSD	DATE REQD	NO REQD
DELIVER TO		
SURFACE TREATMENT	CLEAN	
IDENTIFIC METHOD	TAG	
DWG BY	PAL	DATE 11-19-01
CHK BY	PAL	DATE 11-19-01

LAWRENCE BERKELEY NATIONAL LABORATORY

UNIVERSITY OF CALIFORNIA-BERKELEY

SNS - FES MEBT

BEAM PIPES

STRAP, V-BLOCK ASSY

PAT CLEAR	DWG TYPE	SHOWN ON	SCALE: FULL
	DETAIL		DO NOT SCALE PRINTS
MICROFILMED	DESIGN ACCT NO	CATEGORY CODE	DWG NO 25B7422 — REV A