DWG. NO. 25B8904 SIZE A REV. 1 SH.

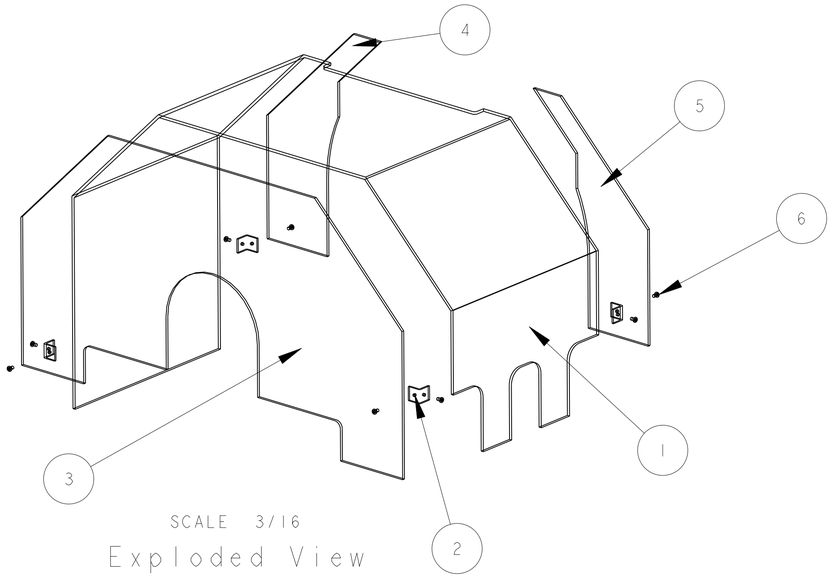

SCALE 3/16
Exploded View

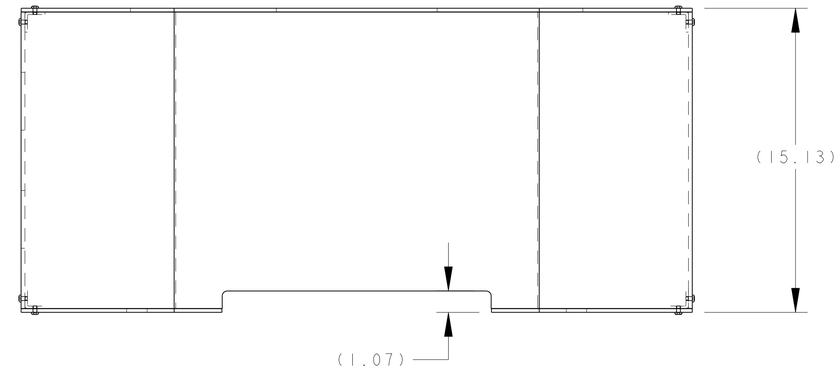

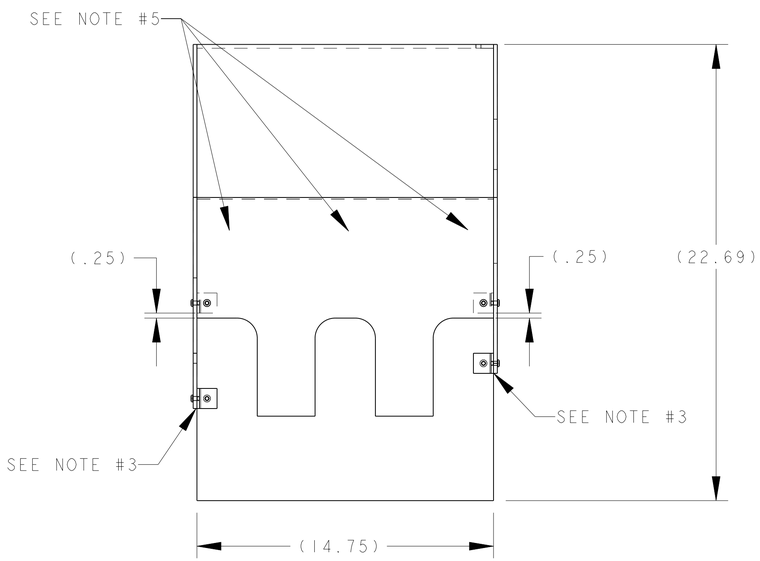

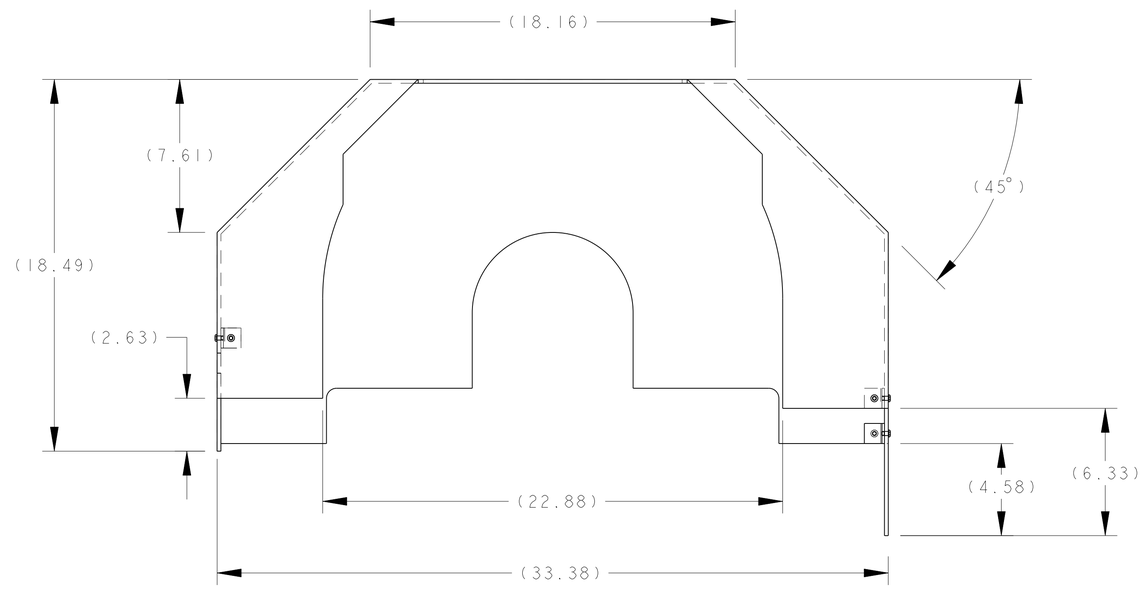

NOTE:

1. USE IPS WELD-ON 55 POLYCARBONATE ADHESIVE OR EQUIVALENT TO BOND FRONT AND REAR SEGMENTS TO MAIN COVER.
2. INSTALL CORNER ANGLES AFTER THE ASSEMBLY IS COMPLETELY BONDED TOGETHER. DRILL COVER ASSEMBLY AS NECCESSARY FOR EACH INDIVIDUAL CORNER ANGLE.
3. MOUNT CORNER ANGLE FLUSH WITH THE BOTTOM EDGE OF EITHER ITEM 25B889 THE FRONT OR ITEM 25B777 THE REAR SEGMENT, LEFT.
4. BOND RICHCO CONTINUOUS GROMMET STRIP (SOLID, NATURAL COLOR) #PGS-4 OR EQUIVALENT ON EDGES AS NECCESSARY.
5. DRILL 9/32" THROUGH COVER ASSEMBLY AS NECCESSARY FOR MOUNTING TO THE QUADRUPOLE POWER CABLE CLAMPS (BOTH SIDES).

ITEM	PART NO	REQD	DESCRIPTION	MATERIAL
6		8	10-32 x .3125 BUTTON HEAD CAP SCREW	SS 18-8
5	25B776	1	QUAD ELECTRICAL COVER, REAR SEGMENT, RIGHT	F2100 LEXAN
4	25B777	1	QUAD ELECTRICAL COVER, REAR SEGMENT, LEFT	F2100 LEXAN
3	25B889	1	QUAD ELECTRICAL COVER, FRONT	F2100 LEXAN
2	25B896	4	QUAD ELECTRICAL COVER, CORNER ANGLE	F2100 LEXAN
1	25B778	1	QUAD 1, 2, & 3 ELECTRICAL COVER	F2100 LEXAN

REV	DWG	CHK	ZONE	DATE	CHANGES
A	AD			4/02	INITIAL RELEASE

UNLESS OTHERWISE SPECIFIED
PROJECTION:
TOLERANCES: X.X ± 0.1 FRAC. ± 1/64; X.XX ± 0.03 Angles ± 1.0°; X.XXX ± 0.010 FINISH 125
DO NOT SCALE PRINT
THREADS ARE CLASS 2
CHAMFER ENDS OF ALL SCREW TREADS 30°
CUT ROUND, 1.5 THREAD RELIEF ON MACHINED THREADS
BREAK EDGES .016 MAX. ON MACHINED WORK
REMOVE BURRS, WELD SPLATTER & LOOSE SCALE
IN ACCORDANCE WITH ASME Y14.5M & B46.1

SHOP ORDERS
ACCT NO. | NO. REQD | SER NO. - | DATE ISSD -
DEL TO | DATE REQD -
SURFACE TREATMT -
IDENT METHOD TAG
PROJECT NUMBER N/A
PROJECT NAME N/A
DWG BY Allan DeMello DATE 26-Apr-02
CHK BY Allan DeMello DATE
APR BY Allan DeMello DATE

ERNEST ORLANDO LAWRENCE BERKELEY NATIONAL LABORATORY
UNIVERSITY OF CALIFORNIA - BERKELEY

SNS - FES MEBT
MECHANICAL SUB-SYSTEMS
QUADRUPOLE MAGNETS 1-3 ELECTRICAL COVER ASSEMBLY

MICROFILMED: | DWG. TYPE ASSEM | SHOWN ON 25B699 | SCALE: 1/4 | DO NOT SCALE PRINTS
SHEET 1 OF 1
PATENT CLEAR: | DESIGN ACCT. NO. - | CATEGORY CODE FE3330 | DWG. NO. 25B8904 SIZE | REV. A

Dwg. File: 25B890 Model File: 25B890