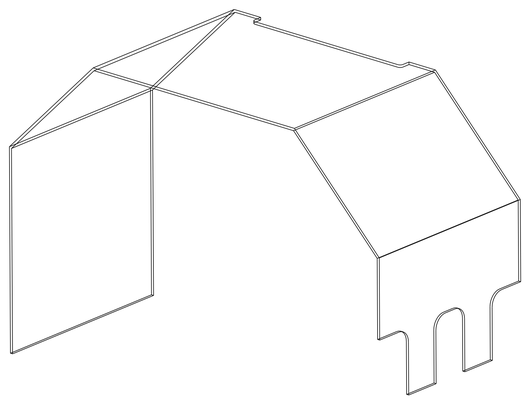

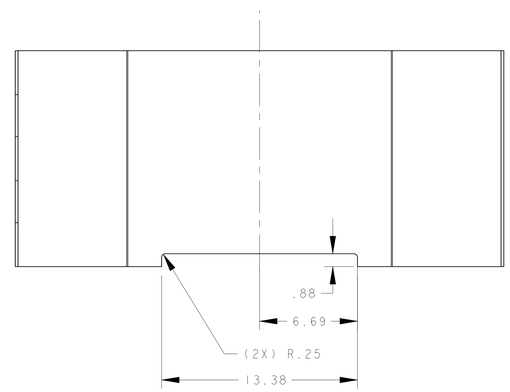

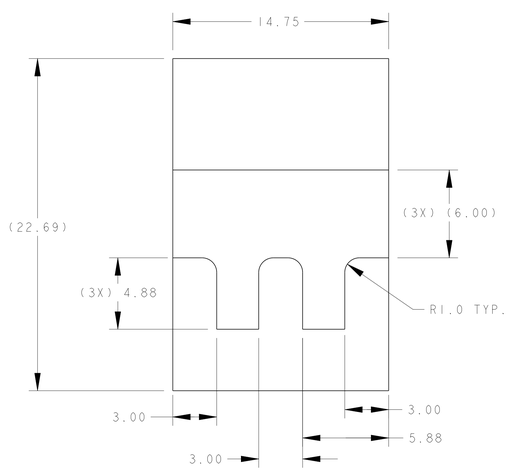

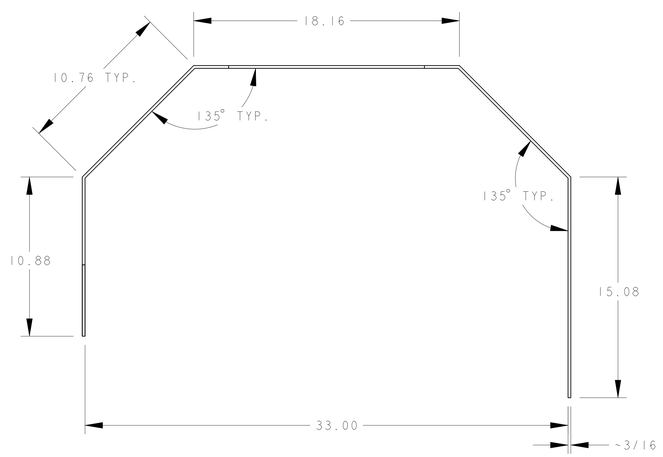

DWG. NO.	SIZE	REV.	SH.
25B7784	A		1

REV	DWG	CHK	ZONE	DATE	CHANGES
A	AD			4/02	INITIAL RELEASE

UNLESS OTHERWISE SPECIFIED
PROJECTION:

TOLERANCES		
X.X ± 0.1	FRAC. ± 1/64	
X.XX ± 0.03	Angles ± 1.0°	
X.XXX ± 0.010	FINISH	

DO NOT SCALE PRINT

THREADS ARE CLASS 2
CHAMFER ENDS OF ALL SCREW THREADS 30°
CUT ROUND, 1.5 THREAD RELIEF ON MACHINED THREADS
BREAK EDGES .016 MAX. ON MACHINED WORK
REMOVE BURRS, WELD SPLATTER & LOOSE SCALE
IN ACCORDANCE WITH ASME Y14.5M & B46.1

SHOP ORDERS

ACCT NO.		NO. REQD	SER NO. -
			DATE ISSD -
DEL TO			DATE REQD -
SURFACE TREATMT -			
IDENT METHOD	TAG		
PROJECT NUMBER	N/A		
PROJECT NAME	N/A		
DWG BY	Allon DeMello		DATE 19-Apr-02
CHK BY	A. DeMello		DATE
APR BY	A. DeMello		DATE

DESCRIPTION	MATERIAL	MAT. LOCATION
-	F2100 LEXAN	-

ERNEST ORLANDO LAWRENCE
BERKELEY NATIONAL LABORATORY
UNIVERSITY OF CALIFORNIA - BERKELEY

SNS-FES MEBT
MECHANICAL SUB-SYSTEMS
QUAD 1, 2, & 3 ELECTRICAL COVER

MICROFILMED:	DWG. TYPE	SHOWN ON	SCALE: 1/4	DO NOT SCALE PRINTS
	PART	25B890	SHEET 1 OF 1	
PATENT CLEAR:	DESIGN ACCT. NO.	CATEGORY CODE	DWG. NO.	SIZE / REV.
	-	FE3330	25B7784	A