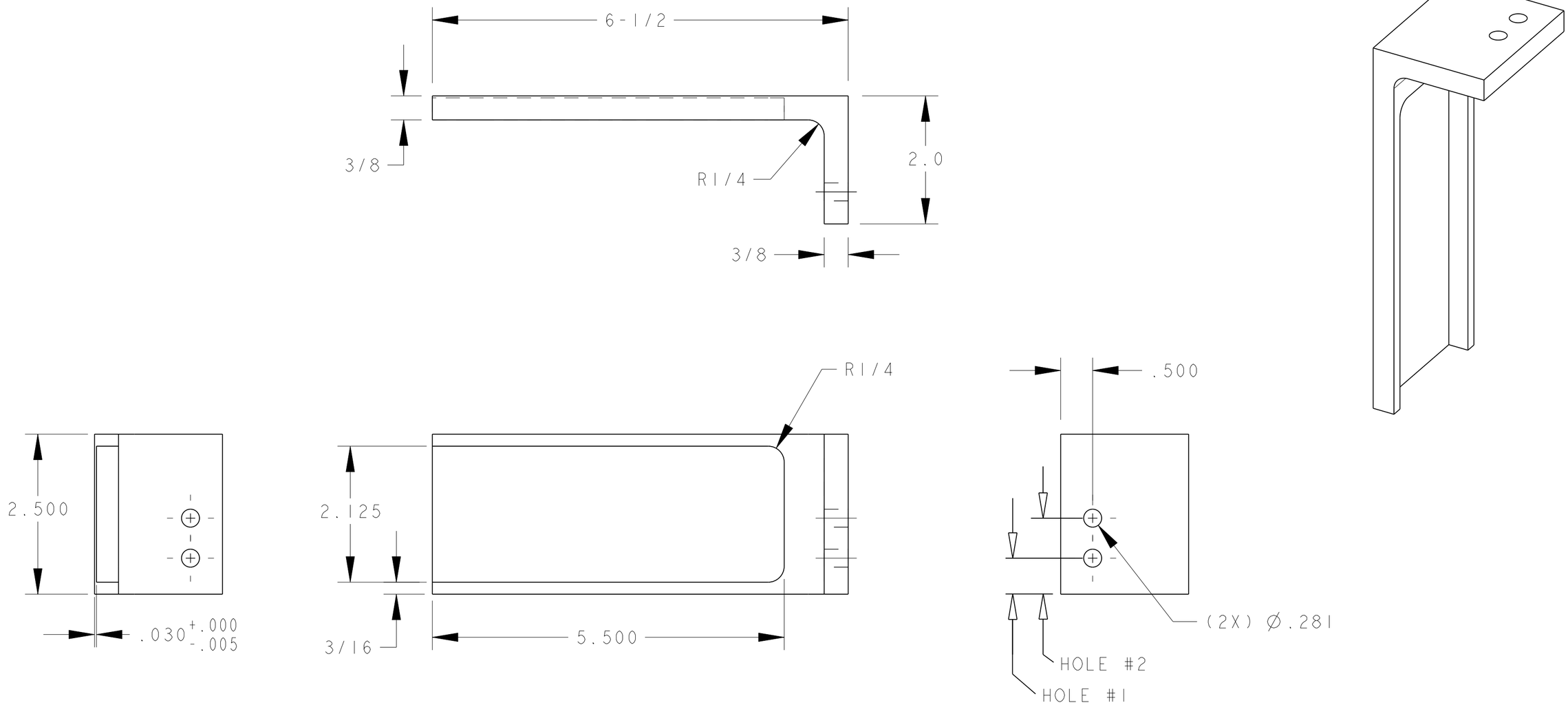

PART NAME	TAB NUMBER	FEATURE	DIMENSION
LEFT	-01	HOLE #1	.563
LEFT	-01	HOLE #2	1.188
RIGHT	-02	HOLE #1	1.313
RIGHT	-02	HOLE #2	1.938

-	G10	-
DESCRIPTION	MATERIAL	MAT. LOCATION

REV	DWG	CHK	ZONE	DATE	CHANGES
A	AD			4/02	INITIAL RELEASE

UNLESS OTHERWISE SPECIFIED
PROJECTION:

TOLERANCES		
	X.X ± 0.1	FRAC. ± 1/64
	X.XX ± 0.03	Angles ± 1.0°
	X.XXX ± 0.010	FINISH 125

DO NOT SCALE PRINT

THREADS ARE CLASS 2
CHAMFER ENDS OF ALL SCREW TREADS 30°
CUT ROUND, 1.5 THREAD RELIEF ON MACHINED THREADS
BREAK EDGES .016 MAX. ON MACHINED WORK
REMOVE BURRS, WELD SPLATTER & LOOSE SCALE
IN ACCORDANCE WITH ASME Y14.5M & B46.1

SHOP ORDERS

ACCT NO.	NO. REQD	SER NO.	-
DEL TO		DATE ISSD	-
SURFACE TREATMT	-	DATE REQD	-
IDENT METHOD	TAG		
PROJECT NUMBER	N/A		
PROJECT NAME	N/A		
DWG BY	Allan DeMello	DATE	19-Nov-01
CHK BY	Allan DeMello	DATE	
APR BY	Allan DeMello	DATE	

ERNEST ORLANDO LAWRENCE BERKELEY NATIONAL LABORATORY
UNIVERSITY OF CALIFORNIA - BERKELEY

SNS - FES MEBT
MECHANICAL SUB-SYSTEMS
QUADRUPOLE 12 INSULATOR, LEFT AND RIGHT

MICROFILMED:	DWG. TYPE	SHOWN ON	SCALE: 3/4	DO NOT SCALE PRINTS
	PART	25B612	SHEET 1 OF 1	
PATENT CLEAR:	DESIGN ACCT. NO.	CATEGORY CODE	DWG. NO.	SIZE / REV.
	-	FE3330	25B7693	A

Dwg. File: 25B769 Model File: 25B769

DWG. NO. 25B7693 SIZE A REV. SH. 1

Rev. 1/29/2000 J. R. Osborn