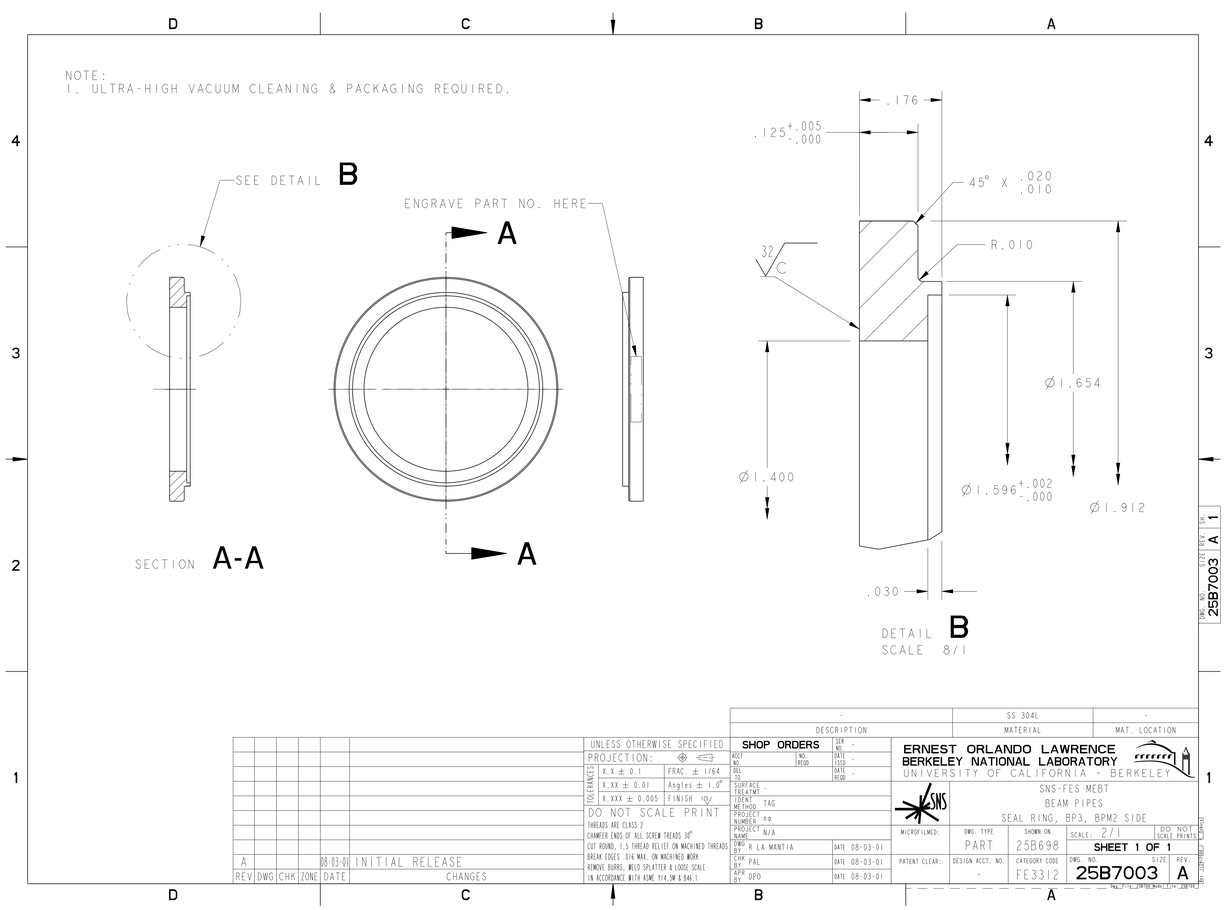
NOTE:
1. ULTRA-HIGH VACUUM CLEANING & PACKAGING REQUIRED.
SEE DETAIL B
ENGRAVE PART NO. HERE
A
A
SECTION A-A
.176
.125 +.005 -.000
45° X .020 .010
R.010
32
C
Ø1.654
Ø1.400
Ø1.596 +.002 -.000
Ø1.912
.030
DETAIL B
SCALE 8/1
DWG. NO. 25B7003
SIZE A
REV. 1
SH.
UNLESS OTHERWISE SPECIFIED
PROJECTION:
TOLERANCES
X.X ± 0.1
FRAC. ± 1/64
X.XX ± 0.01
Angles ± 1.0°
X.XXX ± 0.005
FINISH 125
DO NOT SCALE PRINT
THREADS ARE CLASS 2
CHAMFER ENDS OF ALL SCREW TREADS 30°
CUT ROUND, 1.5 THREAD RELIEF ON MACHINED THREADS
BREAK EDGES .016 MAX. ON MACHINED WORK
REMOVE BURRS, WELD SPLATTER & LOOSE SCALE
IN ACCORDANCE WITH ASME Y14.5M & B46.1
A
08-03-01
INITIAL RELEASE
REV
DWG
CHK
ZONE
DATE
CHANGES
SHOP ORDERS
ACCT NO.
NO. REQD
SER NO.
DATE ISSD
DEL TO
DATE REQD
SURFACE TREATMT
IDENT METHOD TAG
PROJECT NUMBER no
PROJECT NAME N/A
DWG BY R LA MANTIA
DATE 08-03-01
CHK BY PAL
DATE 08-03-01
APR BY DPO
DATE 08-03-01
DESCRIPTION
SS 304L
MATERIAL
MAT. LOCATION
ERNEST ORLANDO LAWRENCE
BERKELEY NATIONAL LABORATORY
UNIVERSITY OF CALIFORNIA - BERKELEY
SNS-FES MEBT
BEAM PIPES
SEAL RING, BP3, BPM2 SIDE
MICROFILMED:
DWG. TYPE PART
SHOWN ON 25B698
SCALE: 2/1
DO NOT SCALE PRINTS
SHEET 1 OF 1
PATENT CLEAR:
DESIGN ACCT. NO.
CATEGORY CODE FE3312
DWG. NO. 25B7003
SIZE
REV. A